MIDWAY CITY

STANDARD SPECIFICATIONS AND DRAWINGS

January 2020

Prepared By:

HORROCKS ENGINEERS

STANDARD SPECIFICATIONS
TABLE OF CONTENTS

00200	Permit Requirements for Work in the Public Place
00700	General Improvement Requirements
00900	Environmental Control
01450	Testing and Process Control
01500	Construction Facilities and Temporary Controls
01700	Contract Closeout
02150	Shoring and Underpinning
02205	Common Fill
02206	Select Fill
02225	Excavation and Backfill Operations
02245	Low Density Concrete Backfill – Flowable Fill
02250	Soil Compaction
02504	Asphalt Concrete
02505	Emulsified Asphalt Slurry Seal
02510	Asphalt Paving
02511	Asphalt Pavement Crack Sealing
02512	Restoration of Surface Improvements
02528	Concrete Structures, Driveway, Sidewalk, Curb and Gutter
02550	Trails
02607	Manholes and Covers
02609	Grease and Sand Interceptor
02660	Pipeline Testing
02668	Water Transmission and Distribution Systems
02675	Disinfection
02720	Storm Sewer Systems
02745	Chip Seal Coat
02765	Pavement Marking Paint
02772	Ponds
02832	Fences
03200	Concrete Reinforcement
03304	Portland Cement Concrete
03310	Concrete Work
03345	Concrete Finishing
16530	Residential Street Lighting

Standard Drawings Table of Contents

SECTION 00200

PERMIT REQUIREMENTS FOR WORK IN THE PUBLIC PLACE

PART 1 GENERAL

1.01 PURPOSE OF INTENT

A. The purpose of this section is to describe Midway City's Department of Public Work's policies for issuing permits and to control any excavation and construction operations in the public right-of-way in Midway City. All contractors and utility companies proposing to construct, repair or replace any facility within the public right-of-way, shall contact the Midway City Department of Public Works and complete all permit requirements prior to commencing proposed work as outlined in this section.

1.02 POLICIES

A. Permittee must be licensed with the State of Utah. It is the Policy of Midway City that contractors desiring to perform work in the City's public right-of-way shall be properly licensed in the State of Utah.

B. Policy for determining when "permit waivers" can be granted. Working within the public right-of-way without a permit violates Midway City ordinances unless the permit is waived by the Public Works Department. Waivers can be granted by the Public Works Department when any of the following conditions occur:

1. When routine maintenance work which is being done by the City, State and utility personnel does not involve excavations in the City's public right-of-way, i.e., crack sealing, street resurfacing and repair, snow plowing, sanding, sweeping, garbage collection, storm drain cleaning, leaves pickup, above grade work, etc.

2. When a permittee allows other contractors or utility companies to perform work in the permitted trench limits.

3. When utilities must be relocated or adjusted in conjunction with a City Public Works Department sponsored project provided the utility work is being accomplished within one week of the time the City or its Contractor is scheduled to begin construction at that location and provided the work is coordinated and approved by the City's Public Works Department.

C. Policy for issuing no fee permits. The Public Works Department reserves the right to issue "no fee permits" for work in the public way when the following conditions are met:

1. When abutting property owners are repairing or replacing in kind any existing public facilities such as drive approaches, curb, gutter or sidewalk, construction of new facilities or any combination thereof.

2. When utility companies are doing excavation work and such work is required in conjunction with a City Public Works Department project, and the work is required to be accomplished prior to the execution of the Public Works Department contract.

3. When the City Public Works Department is repairing or maintaining public right-of- way facilities such as curbs, gutters, cross drains, storm drains, traffic facilities, driveway, sidewalk, etc, and such work requires excavation.

4. When frames and lids in paved surfaces are raised or lowered providing the work does not disturb the underlying road base material.

D. Policy for revoking "Permit Waivers" and "No Fee Permits". "Permits Waivers" and "No Fee Permits" will be revoked by the Public Works Department if the work is defective or requires action or supplemental inspection by the Public Works Department. In the revocation proceedings, the Public Works Department shall serve written notice which defines the problems encountered and the time (at least one day) the Permittee has to correct the problem. If the work is not satisfactorily completed within the time specified, the "Permit Waiver" or the "No Fee Permit" shall be revoked. The Permittee will be required to secure a Fee Permit before proceeding to complete the work.

E. Policy for extending permit construction time limits. Subject to the Public Works Department's approval, permits which expire may be extended by paying a $10.00 permit extension fee. The length of the extension determined by the Permittee shall be subject to the approval of the Public Works Department.

1.03 GENERAL CONDITIONS

A. Permit: When the work is in progress, the Permittee shall have at the work site a copy of the permit and the Contractor's License Number under which the work is being performed.

B. Emergency work: Maintenance of pipelines or facilities in the public right-of-way may proceed without a permit when emergency circumstances demand the work be done immediately, provided a permit could not reasonably and practicably have been obtained beforehand. In the event that emergency work is commenced on or within any public way of the City, the Public Works Department shall be notified within one-half hour when the work commences or as soon as possible from the time the work is commenced. If emergency work is commenced during off business hours, the Public Works Department will be notified within one (1) hour of the start of work on the first regular business day on which City offices are open after such work commences, and, at the discretion of the Public Works Department, a permit may be issued which shall be retroactive to the date when the work was begun. Before commencing and while conducting emergency work, all necessary safety precautions for the protection of the public and the direction and control of traffic shall be taken. None of the provisions of these regulations are waived for emergency situations except the prior permit requirements.

C. Private access: Temporary, all weather roadways, driveway, walks, and right-of-ways for vehicles and pedestrians shall be constructed and continuously maintained where required.

D. Existing utilities: The Contractor shall use extreme caution to avoid a conflict, contact or damage to existing utilities, such as power lines, sewer lines, storm drains, street lights, telephone lines, television lines, water lines, gas lines, poles or other appurtenances during the course of construction of this project. Any such conflict, contact or damage shall be immediately communicated to the Public Works Department.

E. Preconstruction pictures of existing public right-of-way improvements: The Permittee may secure pictures of the conditions of the existing public way improvements such as curbing, sidewalk, landscaping, asphalt surfaces, etc. In the event that public right-of-way improvements are damaged and no pictures are taken, the Public Works Department will assume the correction of the damage is the responsibility of the Permittee.

PART 2 PROCEDURES

2.01 COMPLIANCE WITH CITY STANDARDS

A. All work performed in Midway City shall be in accordance with the most recent version if the Midway City Standard Specifications and Drawings.

2.02 EXCAVATION PERMIT REQUIREMENTS

A. No excavations or street cuts shall be performed within the public right-of- way without first obtaining a permit from the City. Cut permits shall be valid for a period of 60 days. Such permits shall be issued by the City upon the applicant meeting the conditions and making the commitments as shown on the Standard City cut permit drawing or as described below. The more stringent of the two shall govern.

1. Show proof that a competent, responsible, and licensed contractor will do the work.

2. Present evidence of public liability insurance in an amount of not less than $250,000.00

3. Post a cash bond, an adequate performance bond, or a blanket license and permit bond. The cash bond or performance bond will be held by the City to guarantee that the required improvements, restoration work, surface and every part thereof, will remain in good condition for a period of 2 years after final acceptance.

4. Agree, at no cost to the City, to make all repairs and to maintain the improvements, the trench, the surface, and every part thereof in good condition during the two (2) year warranty period.

5. Provide proper traffic signage in accordance with the Manual on Uniform Traffic Control Devices (MUTCD) and provide for and maintain through traffic in a form approved by the City Engineer at all times throughout the duration of the work.

6. Obtain approval from the City Engineer for any required road closures and provide 48 hours notice to those responsible for emergency services: e.g. school

authority, law enforcement and fire protection officials.

7. Properly backfill or plate all cuts and excavations at the end of each working day.

8. Obtain City inspection of the work. Calls for inspection need to be made 24 hours in advance.

9. Repair roadway surfaces with temporary bituminous surfacing, two (2) inches thick, if permanent paving cannot be completed within 14 days of backfilling the trench. Temporary surfacing must be smooth and flush with the road surface and repaired as necessary by the contractor to maintain the condition until permanent paving is complete.

10. Backfill with untreated base course material, drain rock or material as approved by the engineer, compacted to 95 percent of the maximum dry density, starting from the pipe bedding and continuing up to the bottom of the pavement. Excavated material is not to be placed back under paved surfaces. Excavated material is not to be used for backfill unless contractor can provide density testing, and material is in compliance with section 02225-5 item 3.08 C.

11. Permanent resurfacing shall be a minimum of 3 inches thick as per the Midway City Standard Specifications and Drawings. Paving width shall extend to 12 inches beyond each side of the re-compacted width of the trench. Existing pavement edges shall be saw cut to form a clean line. Asphalt edges shall be tacked and rolled with a steel drum roller to achieve a smooth level surface.

12. Fees: The application for a permit authorizing excavation and street cuts shall be accompanied by the fee established by the most current Midway City fee schedule that has been approved and adopted by the Midway City Council.

13. Temperatures must be warm enough to avoid the risk of frost damage to existing utilities and assure proper compaction. Road cut permits will be allowed between April first and October fifteen. Written permission from the city engineer must be obtained if a cut is to be made outside of these dates. A road cut will not be allowed once the temperature drops below 32° night or day, ground is frozen or compaction cannot be obtained. Restrictions apply to area 5 feet out of the edge of asphalt. This does not apply to borings, emergencies and excavations beyond the 5 feet from edge of asphalt.

2.03 EXCAVATION OPERATIONS

A. Blue stakes: Before commencing excavation operations, the Permittee shall call “Blue Stakes” and Midway City Public Works Department.

B. Midway City requires that the Contractor/or developer working in the City right-of-way, pot hole for any existing utilities that may be in the area before any other excavation begin.

C. Traffic control devices: Traffic control devices such as barricades, signs and cones must

be in place before excavation begins.

D. Protection of paved surfaces outside of excavation area: In order to avoid unnecessary damage to paved surfaces, backhoes, outriggers, track equipment or any other construction equipment that may prove damaging to asphalt shall use rubber cleats or paving pads when operating on or crossing said surfaces.

2.04 ENVIRONMENTAL CONTROL

A. Dust and debris: The Permittee or Contractor shall keep dust and debris controlled at the work site at all times. If necessary, wet down dusty areas with water and provide containers for debris.

B. Noise: The Permittee or Contractor shall keep neighborhood free of noise nuisance in accordance with the Noise Ordinance.

C. Cleanup: The Permittee or Contractor shall remove all equipment, material, barricades and similar items from the right-of-way. Areas used for storage of excavated material will be smoothed and returned to their original contour. Vacuum sweeping or hand sweeping shall be required when the Public Works Department determines cleaning equipment is ineffective.

2.05 ENFORCEMENT

A. Violators of these regulations of working within the Public Way shall be subject to the provisions of Midway City Ordinances.

END OF SECTION

SECTION 00700

GENERAL IMPROVEMENT REQUIREMENTS

PART 1 GENERAL

1.01 SECTION INCLUDES

A. This section defines the general requirements for improvements to be built by the Developer.

1.02 GENERAL REQUIREMENTS

A. The Developer is responsible to comply with the standard specifications in force at the time each improvement is made.

B. The improvements shall include all street improvements in front of all lots and along all dedicated streets to a connection with the existing improvements of the same kind and/or to the boundary of the subdivision nearest the existing improvements.

C. If the roadway length exceeds the maximum cul-de-sac length the development shall have two points of paved ingress and egress. To determine if two points of ingress and egress are established we close each intersection to determine if traffic can still leave the development and evacuate the area.

D. The development shall connect to all adjacent development roads and provide for future connection to adjacent undeveloped land.

E. The developer is required to slurry seal all street improvements between one year after final inspection and prior to releasing the warranty.

F. Layout must provide for future extension to adjacent development and to be compatible with the contour of the ground for proper drainage.

G. All public improvements such as roads, curb & gutter, sidewalk, water lines, sewer lines, pressurized irrigation lines, and any other public improvement or buried conduit shall be installed to the boundary lines of the development.

H. If construction requires a specification not found herewith and is deemed necessary by City Engineer, the City Engineer will be allowed two weeks to provide an adequate specification to control and provide guidelines for construction.

I. Inspection: The term "inspection" or its derivatives means a review of the project, including but not limited to a visual review of the work completed to date. It does not include or imply an exhaustive or detailed review of the Work nor does it create a duty on the part of the Engineer or Owner to detect latent defects.

J. Geotechnical Study is required on all developments unless waved by the City Council at the direction of the City Engineer.

K. Easements for water, sewer, or storm drains not in the public right of way shall be a minimum of 20 feet for a single utility and 10 feet for each additional utility, dedicated solely to Midway City for the given use. Public Utility Easement's shall not be used in lieu of dedicated easements for new utilities and access.

L. The top back of curb shall be stamped in the following manner, showing locations of property lines, water, sewer, and secondary irrigation lateral stub pipes:

1. Property lines shall be shown with a lead or brass plugs and a rebar and cap in the rear of the lot.
2. "W" stamp for culinary water.
3. "S" stamp for sewer.
4. "PI" stamp for pressurized irrigation.

PART 2 SUBMITTALS

2.01 DRAWINGS: Complete and detailed construction plans and drawings of improvements shall be submitted to the City Engineer for signature prior to final approval of the project by City Council. The construction drawings will not be signed by the City Engineer until the following items have also been completed:

1. The plan check procedure has been completed.
2. All required easements have been designated on the subdivision plat or dedicated by separate document to the City.
3. An Engineers Estimate of the improvement costs has been completed and returned to the City.

The plat map will not be signed by the city engineer for recordation until the following items have also been completed:

1. The performance agreement has been completed and executed.
2. All required water shares have been transferred to the city.
3. The City escrow deposits have been paid in full.

Prior to commencing of any work in the field, the Developer shall deliver to the City three (3) sets of construction plans and electronic PDF set of plans.

The signed construction drawings will be valid for two (2) years from the date of City approval. If construction has not begun within two (2) years from the approval date, the drawings shall become null and void. Expired drawings will require rechecking by the City.

2.02 Storm Drain Calculations: The following criteria shall be used in designing a storm drainage system:

1.	The allowable release rate:	0.10 cfs / acre.
2.	Detentions with 0.10 cfs release rate:	24 hour / 25 year storm
3.	Retentions with 0.00 cfs release rate:	24 hour / 100 year storm
4.	Pipe line capacity, peak flow @ 100% full:	10 year storm
5.	Minimum main line pipe diameter:	18-inch
	(Pipes less than 18-inch must be approved by Engineer and have verified flow calculations.)	
6.	Minimum main line pipe velocity:	2 feet per sec

PART 3 REQUIREMENTS

3.01 STANDARDS FOR CONSTRUCTION DRAWINGS: The following instructions are for the purpose of standardizing the preparation of drawings to obtain uniformity in appearance, clarity, size and style.

A. Three (3) sets of full size, one set of 11"x17" and electronic PDF set of the approved construction drawings shall be submitted to the City Engineer.

B. One approved set shall be kept available at the construction site.

C. The plans and designs shall meet the standards defined in the Specifications and Drawings hereinafter outlined. The minimum information required on drawings for improvements are as follows:

1. All drawings and/or prints shall be clear and legible and conform to good engineering and drafting room practice.
2. Size of drawings shall be 24" x 36" and 11" x 17" (trim line) with minimum borders of 1/2" on top, bottom, and right sides, left side 1/2".
3. In general, the following shall be included on drawings:

   a. North arrow (plan)
   b. Scale and elevations referenced to U.S.G.S. datum.
   c. Stationing and elevations for profiles
   d. Title block, located in lower right corner of sheet to include

      - Name of City
      - Project title (subdivision, etc.)
      - Specific type and location of work
      - Space for approval signature of City Engineer and date

- Name of engineer or firm preparing drawings with license number.

3.02 CURB AND GUTTER, DRAINS AND DRAINAGE STRUCTURES, SIDEWALKS, AND STREET SURFACING DRAWING REQUIREMENTS

A. Scale: 1"=50' horizontal; 1"=5' or 10' vertical.

B. Plans and profiles for each side of the street whether existing or proposed with elevations clearly indicated. Centerline profile may be eliminated.

C. Stationing and top of curb elevations with curve data for all curb returns.

D. Flow direction and type of cross drainage structures at intersections with adequate flow line elevations.

E. B.M. location and elevation (use U.S.G.S. datum).

F. Type of curb and gutter and distance from front to back of curb.

G. Cross slopes to gutter as shown on the standard cross section drawings.

H. Vertical curves for grade breaks equal to or greater than 1%.

I Typical street cross- section for all street sizes and variations.

J. Street survey monument locations.

K. Plan and profile of existing ground and purposed profiles extending 200' beyond the proposed project.

3.03 CULINARY WATER DRAWING REQUIREMENTS

A. Scale: 1"=50' horizontal; 1"=5' or 1"=10' vertical.

B. Size and location of water mains, valves, hydrants, and related appurtenances.

C. Type of pipe.

D. Minimum cover.

E. Details of all utility conflicts

3.04 PRESSURIZED IRRIGATION DRAWING REQUIREMENTS

A. Scale: 1"=50' horizontal; 1"=5' or 1"=10' vertical.

B. Size and location of water mains, valves, hydrants, and related appurtenances.

C. Type of pipe.

D. Minimum cover. The main line pipe shall be sloped to drain.

E. Details of all utility conflicts

3.05 STRUCTURES

A. Each set of plans shall be accompanied by a separate sheet of details for structures which are to be constructed.

B. All structures shall be designed in accordance with minimum requirements established by the Midway City Standard Specifications.

C. All structural drawings shall contain the following:

1. Scale of each detail.

2. Title block, lower right hand corner (same format on all sheets) including the name of the subdivision.

3. Completely dimensioned and described.

PART 4 EXECUTION

4.01 GENERAL

A. All construction work involving the installation of improvements in subdivisions shall be subject to inspection by the City.

B. Certain types of construction shall require continuous inspection while others may have only periodic inspections as determined by the City Engineer.

1. Continuous inspection may be required on the following types of work:

a. Laying of street surfacing.

b. Placing of concrete for curb and gutter, sidewalks and other structures.

c. Laying of drainage pipe, water pipe, auxiliary pipe, valves, hydrants and testing.

2. Periodic inspections may be required on the following:

a. Street grading and gravel base.

b. Excavations for curb and gutter and sidewalks.

c. Excavations for structures.

d. Trenches for laying pipe.

e. Forms for curb and gutter, sidewalks and structures.

C. On construction requiring continuous inspection, no work shall be started except in the presence of, or with the prior approval of the City Engineer. Any work done in the absence of an inspector‘s approval shall be subject to rejection.

4.02 PRECONSTRUCTION CONFERENCE

A. A Preconstruction conference shall be held before any excavation or other work is begun in the subdivision or project. The meeting will include: (a) City Engineer; (b) Developer or Project Manager; (c) Subdivision or Project Engineer; (d) all Contractors and Subcontractors involved with installing the subdivision or project improvements; (e) a representative of Midway City Inspection Department; (f) representatives of local utility companies may be invited. Items pertaining to the construction and inspection of the subdivision or project improvements will be discussed. The Developer shall have at the meetings: One (1) copy of the Midway City Standard Specification and Drawings Additional copies may be obtained for $20.00 each.

4.03 REQUESTS FOR INSPECTION

A. Requests for inspections shall be made to the City, in writing or by personal contact with the inspector assigned to the project, by the person responsible for construction.

B. Requests for inspection on work requiring continuous inspection shall be made three (3) days prior to the commencing of the work.

C. Notice for all other inspections shall be given one (1) working day in advance of the required inspection (subsequent inspections and reinspection shall require the same notification period).

D. After hour and/or weekend inspections are available under extreme conditions for $75 per hour.

4.04 FINAL CONSTRUCTION COMPLETION INSPECTION

A. An inspection shall be made by the City Engineer and Public Works Director after all construction work is completed.

B. Any faulty or defective work shall be corrected by the persons responsible for the work within a period of thirty (30) days of the date of City Engineers Inspection Report defining the faulty or defective work.

C. The Developer shall survey all surface features (i.e. valves, meter cans, hydrants, cleanouts, manholes, irrigation boxes, pipe flow line elevations for sewer and storm drain pipes etc.) for the Record Drawings.

D. The Developer shall furnish “Record” drawings of all improvements, prior to development final construction approval. Electronic versions of the “Record” drawings shall be submitted in an Auto Cad format and in a PDF format including all survey point files in an Auto Cad format.

E. The final bond release shall not be released until Record Drawings are approved by the City Engineer.

4.05 REQUESTS FOR WATER SHUT DOWN

A. Request for water shut down shall be made a minimum of 24 hours prior to the desired shut down.

B. Requests shall be made to the Public Works and include, date, time and location.

C. Valves are to be opened and closed by City personnel only.

D. Contractor is to provide a minimum of 24 hour notification to all customers affected by the shut down including but not limited to door to door contact and a flyer or handout describing the estimated date, time, location of the shut down, and emergency phone number.

4.06 GUARANTEE OF WORK

A. The Developer shall warrant and guarantee the improvements and post an approved warranty bond equivalent in value to 10% of the improvements constructed and provided for hereunder, and every part thereof, will remain in good condition for a period of one (1) year, after the date of the Construction Completion Inspection Report by the City Engineer, and agrees to make all repairs to and maintain the improvements and every part thereof in good condition during that time with no cost to the City.

B. The determination for necessity of repairs and maintenance of the work rests with the City Engineer. His decision upon the matter shall be final and binding upon the Developer, and the guarantee hereby stipulated shall extend to and include, but shall not be limited to the entire street base, and all pipe, joints, valves, backfill, and compaction as well as the working surface, curbs, gutter, sidewalks, and other accessories that are, or may be affected by the construction operations, and whenever , in the judgment of the City Engineer, said work shall be in need of repairs, maintenance, or rebuilding.

C. If the Developer fails to begin making repairs within ten (10) days from the date of the service of such notice, the City Engineer shall have such repairs made and the cost of such repairs shall be paid by the Developer together with 25 percent in addition thereto as and for stipulated damages for such failure on the part of the Developer to make the repairs.

4.07 SUBDIVISION ORDINANCES

A. The Developer and his Engineer must familiarize themselves with the existing development ordinances and requirements, of which are not included in these standards.

4.08 ROADWAY PERMITS

A. For construction material and procedures not addressed by the specifications, the most recent revision of the standard specification of the following agencies shall apply:

1. American Association of State Highway & Transportation Officials. (A.A.S.H.T.O)
2. American Society for Testing & Material (A.S.T.M.)
3. American Water Works Association (A.W.W.A.)
4. Uniform Building Code of the International Conference of Building Officials (U.B.C.)
5. Utah Department of Transportation (U.D.O.T.) Standard Specifications and Standard Plans.
6. Manual on Uniform Traffic Control Devices (MUTCD)

4.09 BUILDING PERMIT AND OCCUPANCY

A. Subdivisions and other large scale development shall be "substantially completed," as defined in Midway City ordinances before a building permit will be issued. Such substantial completion shall be certified in writing by the City Engineer. The certification shall verify that the project has been built as per approved plans.

B. Occupancy will be allowed within any subdivision or development only upon compliance with Midway City Ordinances.

4.10 UNUSUAL LOADINGS

A. In unusual circumstances of structural loading, the City Engineer shall have the authority to require measures to strengthen structure and/or foundations as needed to protect the City's interests.

4.11 SNOW REMOVAL FOR ROADS AND FIRE HYDRANTS

A. The owner of the subdivision or other large scale development shall be responsible to keep the roads and the fire hydrants cleared of snow until the roads are accepted by the City Council.

B. The fire hydrants shall be cleared for at least three (3) feet in all directions.

C. A stake at least six (6) feet in height and no less than one (1) inch by two (2) inch in size shall be placed to mark all fire hydrants.

D. The top two (2) feet of the pole shall be painted fluorescent orange.

END OF SECTION

SECTION 00900

ENVIRONMENTAL CONTROL

PART 1 GENERAL

1.01 SECTION INCLUDES

A. The purpose of this section is to prevent discharge of sediment, dust, debris, and other construction related material or pollutants from construction sites. Sediment and debris from construction sites are a major source of pollution to air, waterways, and water systems located within Midway City and surrounding areas.

B. The Contractor shall be responsible to obtain the necessary permits prior to construction including the SWPPP, and UPDES permits if required by the State of Utah, and the Division of Water Quality.

C. The Contractor shall dispose of waste materials in accordance with Utah Administrative Code, Rule: R315. Environmental Quality, Waste Management and Radiation Control, Waste Management.

1. Any asphalt removed from a City project must be disposed of in a landfill permitted to accept of this type of material.

1.02 GENERAL REQUIREMENTS

A. Control measures shall be implemented, and shall meet the following goals and criteria:

1. Prevent or minimize discharge. The proposed control measures shall be designed to prevent or minimize, to the maximum extent practicable, the discharge of sediment, dust, debris, and other construction related pollutants from the construction site by storm water runoff into the storm drainage system, as well as into the air.

2. Prevent or minimize construction debris. The proposed control measures shall be designed to prevent or minimize, to the maximum extent practicable, the deposit, discharge, tracking by construction vehicles, or dropping of mud, sediment, debris or other potential pollutants onto the public streets and rights-of-way.

3. Use of BMP’s. The proposed control measures shall include Best Management Practices (BMP’s) available at the time. BMP’s may include but shall not be limited to, designation of limits of disturbance, temporary silt or sediment fences, sediment traps and detention ponds, straw bale sediment barriers, measures to prevent the blowing of dust or sediment from the site, storm drain inlet protection, and reinforced soil retaining systems, dust control and gabions.

4. Stabilize Site. The control measures shall be designed to preserve existing vegetation where possible. Disturbed portions of the site shall be stabilized. Stabilization practices may include temporary seeding, permanent seeding, mulching, and other appropriate measures. Stabilization measures shall be initiated as soon as practicable in disturbed portions of the site, but in no case more than 14 days after the construction activity in that portion of the site has been temporarily or permanently ceased, except under the following circumstances.

   a. If the initiation of stabilization measures by the 14th day after construction activity temporarily or permanently ceases, is precluded by snow cover or frozen ground conditions, stabilization measures shall be initiated as soon as practicable; or

   b. If construction activity on a portion of the site is temporarily ceased, and earth disturbing will resume within 21 days, temporary stabilization measures need not be initiated on that portion of the site.

B. All construction work involving the installation of BMPs and site stabilization shall be subject to inspection by the City.

PART 2 REQUIREMENTS

2.01 PERMITS

A. Developer shall obtain the required permits from the Utah Pollutant Elimination System (UPDES) Program.

2.02 DRAWINGS

A. Complete and detailed construction plans and drawings detailing the implementation of best management practices (BMP's) and site stabilization shall be submitted to the City for review and approval before ground is broken. It is the City's desire to have the BMP's and site stabilization drawings included in the approved construction plans.

PART 3 COMPLETION

A. The Permitee or Contractor shall remove all equipment, material, barricades and similar items from the right-of-way as the project is completed. Areas used for storage of excavated material will be smoothed and returned to their original contour. Vacuum sweeping or hand sweeping shall be required when the Public Works Department determines cleaning equipment is ineffective.

END OF SECTION

SECTION 01450

TESTING AND PROCESS CONTROL

PART 1 GENERAL

1.01 SECTION INCLUDES

A. This section defines the responsibility of the Developer or Contractor to adequately test native materials and construction materials, and to furnish the City with manufacturer's certifications of material quality.

1.02 QUALITY ASSURANCE

A. The developer or Contractor shall be responsible for all sampling, delivery of samples to a qualified testing agency, testing, and delivery of test results or materials certifications to City at no charge to the City. Testing and certifications reports shall be approved by the City as to conformance to City construction specifications prior to final inspection and/or acceptance by the City of any materials or workmanship.

1.03 SUBMITTALS

A. Field Test Report: When possible submit original reports immediately to Engineer or inspector, but in no case later than end of following day.

B. Laboratory Test Report: Submit original report to Engineer within 24 hours after test results are determined.

PART 2 EXECUTION

2.01 SAMPLING

A. Sampling of materials shall be as specified in each test.

B. The City Engineer or City Inspector may require that sampling be performed in their presence, in which case the Developer or Contractor shall be notified of this requirement in writing at the time the building permit is issued, or at the preconstruction meeting, or when construction drawings are released by the City for construction, as applicable.

C. The presence of a City Inspector shall not relieve the Developer/Contractor of any requirement in this Section.

D. Each sample or test shall be accompanied by the following written data, which shall be reported to the City with test results:

1. Name of Project
2. Name of Developer/Contractor

3. Project Street Address
4. Appropriate Test Name (Material Type Borrow, UBC, Asphalt etc.)
5. Date of Sampling
6. Sample Number (if more than one sample per day)
7. Name of technician who performed the testing
8. Location of sample (Depth, Station, Offset etc.)

2.02 TESTING AGENCY

A. All materials testing, whether in a laboratory or in the field, shall be conducted by a testing agency approved by the City.

2.03 SOIL CLASSIFICATION TEST

A. The soil classification test shall be conducted to determine the suitability of native soils for road subbase and building foundations.

B. The soil classification test shall conform to AASHTO M-146 of latest revision.

C. The soil shall be classified according to AASHTO soil classifications.

D. One soil classification test shall be required for each test area. A test area shall be limited to one parcel of one soil type, a maximum 1,000 feet long and maximum 5 acres.

E. In test areas of less than 2 acres, the City Engineer may waive this requirement.

F. The soil sample shall be taken from a test area at a minimum depth of 24 inches below the future design grades, of native soil, and shall be free from foreign material, asphalt, concrete, ice or manmade materials.

G. Where deep footings or pile foundations are proposed, soil classification tests at several depths may be required in each test area.

H. The results of all determinations shall be reported in writing to City Engineer.

2.04 COMPACTION TEST OF SOIL AND UNTREATED BASE COURSE

A. Laboratory tests to establish maximum laboratory density shall be determined in accordance with AASHTO T-180, Method D for A-1 classification soils and AASHTO T-99, Method D for all other soils.

B. Samples to determine laboratory density shall be taken from the stockpiled backfill or from the uncompacted base course in place.

C. The acceptance of soil and base course with respect to compaction, shall be based upon the average density of all density tests made in a lot.

1. Field density tests shall be as specified by AASHTO T-191 or by use of a portable nuclear density testing device. Field density tests shall be taken at a depth equal to ½ the maximum depth of the lift tested.

2. A lot shall equal the amount of soil or untreated base course compacted in each production day.

3. The developer/contractor shall be responsible to test soil and UBC in accordance with Section 02250, Soil Compaction.

4. The location of sampling sites within the lot shall be chosen on a random basis by use of a suitable random number table.

D. The test results of all samples tested shall be reported to the City Engineer. A test lot shall be accepted when the average of the density tests is not less than the density required for that improvement as specified in Section 02250. No one density test shall be less than 91%.

E. Compaction tests not conforming to required specifications may be rejected and recompaction or related construction efforts to obtain compaction shall be at the Developer's expense.

2.05 PROOF ROLL OF ROADWAY SUBGRADE

A. Proof Roll Test shall be performed in presence of City Engineer or City Representative to determine the structural integrity of the subgrade, street section, and trail section.

B. The Proof Roll Test shall be performed as follows:

1. The contractor shall provide a loaded 10 wheel dump truck or water truck to drive over the subgrade material.

2. The loaded truck shall be driven slowly over the subgrade to locate soft spots in the subgrade surface.

3. Soft spots in the subgrade shall be identified and marked by the City Engineer.

4. It shall be the developer's/contractor's responsibility to remove the rejected subgrade material to depth determined by City Engineer, to eliminate soft spots. The rejected material shall be replaced with A-1-a granular backfill approved by City Engineer.

2.06 GRADATION TEST OF UNTREATED BASE COURSE

A. The gradation of untreated base course shall be determined in accordance with AASHTO T-27.

B. The total amount of material passing the No. 200 sieve shall be determined by washing in water in accordance with AASHTO T-11.

C. The acceptance of road base with respect to gradation shall be based upon the average of all determinations in a lot. A lot shall be limited to one source of road base and limited to one subdivision plat or one development. One sample shall be required for each 1,000

tons of untreated base course in a test lot. When the test lot is less than 100 tons, the requirement for the gradation test may be waived by the City Engineer.

D. The location of sampling sites within a test lot shall be chosen on a random basis by a suitable random number table.

E. All material not conforming to the specified gradations may be rejected at the Developer's expense.

2.07 EXTRACTION - GRADATION TESTING OF BITUMINOUS SURFACE COURSE

A. Samples of the bituminous surface course or asphalt concrete shall be tested with respect to gradation and bitumen content in accordance with Utah Department of Highways Test Procedure 8-946 and 8-947 if required by the City Engineer.

B. Mix design shall be submitted to the City Engineer for approval 5 working days before work is to begin.

C. Acceptance of bituminous surface course with respect to gradation and bitumen content shall be based upon the average of the determinations made in a lot.

1. A lot shall equal the amount of bituminous surface course placed in each production day.

2. When a lot exceeds 1,000 tons, a minimum of three (3) samples shall be taken in each lot.

3. When a lot is 1,000 tons or less, a minimum of two (2) samples shall be taken.

4. Samples shall be taken at the time of lay-down of bituminous surface course and before compaction. Samples shall be taken from the mat behind the lay-down machine.

5. Sampling shall be timed to represent the entire production day. The time of day, date of sample, station and offset location shall be clearly marked with the sample.

6. If the average asphalt is less than 2.5% of optimal content, the Contractor may be required to lay an additional lift or slurry seal, based on the City Engineer's recommendation.

2.08 COMPACTION TESTING OF BITUMINOUS SURFACE COURSE

A. Laboratory tests to establish the maximum laboratory density of bituminous surface course shall be determined by the "Marshall Test" in accordance to ASTM D-1559.

B. Samples to determine maximum laboratory density shall be taken at the time of lay-down of bituminous surface course and before compaction.

C. Acceptance of bituminous surface course with respect to compaction shall be based upon the average determination of field density tests made in a lot.

1. Field density tests shall be by a portable nuclear density testing device or by laboratory density analysis of core samples.

2. A test lot shall be the total linear foot of a paver pass of surface course placed and compacted in each construction day.

3. One field density test shall be taken every 200 feet per paver pass or at a minimum of 2 tests per day whichever is greater, randomly located in the test lot by use of a suitable random number table.

D. The test lot shall be accepted with respect to density when the average of all density determinations is not less than the density required by Section 02504.

E. Core Tests

1. Acceptance of the completed bituminous surface course with respect to thickness shall be based on the average thickness of a test lot.

a. A test lot shall equal approximately 4,000 square yards of completed roadway.
b. A lot shall be divided into sublots of approximately 2,000 square yards.

2. One thickness test, randomly selected by use of a random number table, shall be taken within each sublot. A minimum of three core tests will be taken.

3. A lot shall be accepted when the average thickness of all sublots is not less than 3/8 inch the total designated bituminous surface course thickness and when no individual sublot shows a deficient thickness of more than ½ inch.

4. Lots or sublots that are not acceptable because of deficient thickness shall be brought into compliance by placing additional surface course as directed by the Engineer.

5. The removed core will be replaced with low strength concrete.

2.09 COMPRESSIVE STRENGTH TESTING OF CONCRETE CYLINDERS

A. Samples of concrete shall be taken at the construction site, molded in standard cylinder shapes, allowed to cure, and tested with respect to comprehensive strength when required by the City Engineer.

B. All samples of concrete shall be taken in conformance to AASHTO T-141 of the latest revision.

C. Acceptance of concrete with respect to compressive strength shall be based upon the average determination of all "strength tests" made in a lot.

1. A test lot shall be the quantity of concrete placed at one job in a construction day.

2. For each 50 cubic yards of concrete in a test lot, three (3) compressive "strength tests" shall be run, except that for lots of less than 5 cubic yards, the number of "strength tests" per lot shall be the average strength of three standard cylinders.

3. The making, curing and compressive strength testing of concrete cylinders shall conform to AASHTO T-22 and AASHTO T-23.

D. Concrete may be rejected if desired strengths are not obtained at the Developer's expense.

2.10 ADDITIONAL CONCRETE TESTING

A. Slump Test: Determine slump in accordance with AASHTO T-152.

B. Air Test: Determine normal weight concrete air content; AASHTO T-152 and light weight concrete air content; AASHTO T-196.

C. When requested by Engineer, test concrete in place by impact hammer, sonoscope, or other nondestructive device:

1. To determine relative strengths in various locations in Work.
2. To aid in evaluating concrete strength.
3. To select areas to be cored.

2.11 CERTIFICATIONS FOR WATER SYSTEM VALVES

A. In certain water system equipment, steel items and pipe listed below, a manufacturer's certificate shall be furnished with each unit of equipment, certifying conformance to the applicable requirements of City Standard Specifications:

1. Gate Valves
2. Butterfly Valves
3. Steel Reinforcing Bars
4. Structural Steel
5. Corrugated Metal Pipe
6. Polyvinyl Chloride Pipe
7. ABS Composite (Truss) and Solid Wall Pipe

2.12 SUMMARY TABLE OF TESTS AND CERTIFICATIONS

A. The following is a summary of the tests, number of samples per test and certificates that are required for construction work and developments in City. This summary is provided as a reference guide. For details governing each item, refer to the appropriate test specification herein.

Test Subject	Specific Test	Location
Soil Classification	AASHTO M-145	See Section 01450, 2.03.D
Compaction of Soil & Base Course	Lab Density- AASHTO T-99 Method D or AASHTO T-180 Method D	As needed to establish laboratory density
	Embankment & Base Course Field Density- Portable Nuclear Equipment or AASHTO T-191 Backfill Field Density- Portable Nuclear Equipment or AASHTO T-191	See Section 02250, 2.01.A
Base Course Gradation	Sieve Analysis- AASHTO T-27 Passing No. 200 Sieve- AASHTO T-11	See Section 01450, 2.06.C
Extraction-Gradation Test of Bituminous Surface Course	UDOT Test Procedure 8-946 & 8-947	See Section 01450, 2.07.C.2 & 2.07.C.3
Compaction of Bituminous Surface Course	Lab Density- Marshall Test, ASTM D-1559 Field Density- Portable Nuclear Equipment	See Section 01450, 2.08.C.3
Core Tests	4" Core Sample	See Section 01450, 2.08.E.2
Concrete Test Cylinders	AASHTO T-23	See Section 01450, 2.09.C.2
Pressure Reducing & Regulating Valves	Manufacturer's Certificate	1 for each valve
Gate Valve	Manufacturer's Certificate	1 for each valve over 12" diameter
Butterfly Valves	Manufacturer's Certificate	1 for each valve
Steel Re-Bar	Manufacturer's Certificate	1 for each 1,000 pounds of one grade
Structural Steel	Manufacturer's Certificate	1 for each lot of one shape, one grade
Corrugated Metal Pipe	Manufacturer's Certificate	1 for each 500 lineal feet of one size, one class
Polyvinyl Chloride Pipe	Manufacturer's Certificate	1 for each 500 lineal feet of one size, one class
A.B.S. Pipe	Manufacturer's Certificate	1 for each 500 lineal feet of one size, one class

END OF SECTION

SECTION 01500

CONSTRUCTION FACILITIES AND TEMPORARY CONTROLS

PART 1 GENERAL

1.01 SECTION INCLUDES

A. Construction Facilities: Progress cleaning.

B. Temporary Utilities: Electricity, water, and sanitary facilities.

C. Temporary Controls: Barriers and protection of the installed work.

D. Requirements for controlling surface and subsurface environmental conditions at the construction site, and related areas under the CONTRACTOR's responsibility.

E. Requirements for removal of physical evidence of temporary controls upon completion of work.

1.02 REFERENCES

A. UOSH Construction Standards Chapter D: Occupational Health and Environmental Controls.

PART 2 PRODUCTS

2.01 MATERIALS

A. Temporary Materials: CONTRACTOR's choice.

PART 3 EXECUTION

3.01 PROGRESS CLEANING AND WASTE REMOVAL

A. Maintain areas free of waste materials, debris, and rubbish. Maintain site in a clean and orderly condition

3.02 TEMPORARY ELECTRICITY

A. Cost: By Contractor; provide and pay for power service required from utility source.

3.03 TEMPORARY HEATING

A. Provide and pay for heating devices and heat as needed to maintain specified conditions for construction operations.

3.04 TEMPORARY WATER SERVICE

A Provide, maintain and pay for suitable quality water service required for construction operations at time of project mobilization.

3.05 TEMPORARY SANITARY FACILITIES

A. Provide and maintain required facilities and enclosures, at the time of project mobilization.

3.06 BARRIERS

A. Provide barriers to prevent unauthorized entry to construction areas to allow for Owner's use of site, and to protect existing facilities and adjacent properties from damage from construction operations.

B. Provide protection for plants designated to remain. Replace damaged plants.

C. Protect non-owned vehicular traffic, stored materials, site, and structures from damage.

3.07 PROTECTION OF INSTALLED WORK

A. Protect installed Work and provide special protection where specified in individual specification sections.

B. Provide temporary and removable protection for installed Products. Control activity in immediate work area to prevent damage.

C. Prohibit traffic from landscaped areas.

3.08 NOISE CONTROL

A. Use equipment that is equipped with noise attenuation devises. Comply with UOSH Construction Standards Chapter D rules and regulations and local Laws and Regulations.

B. The Contractor shall comply with UDOT 2017 Standard Specifications, Section 01355, 3.6 Noise Control or most current UDOT Specifications.

3.09 DUST AND MUD CONTROL

A. The Contractor will be required to obtain a permit from Utah Division of Air Quality to minimize fugitive dust from the construction activities.

B. The Contractor will be required to stockpile all excavated and stored material within the existing roadway areas. No construction equipment will be allowed to contact vegetated or wetland areas.

C. Provide suitable equipment to control dust or air pollution caused by construction operations.

D. Provide suitable mud and dirt containment, so work site, access roadways and properties adjacent to the work site are kept clean.

E. The Contractor shall provide all labor, equipment, and materials, and shall use efficient methods wherever and whenever required to prevent dust nuisance or damage to persons, property, or activities, including, but not limited to crops, orchard, cultivated fields, wildlife habitats, dwellings and residences, agricultural activities, recreational activities, traffic, and similar conditions. Methods of mixing, handling, and storing cement, pozzolan, and concrete aggregate shall include means of eliminating atmospheric

discharges of dust.

F. The City Engineer and/or Construction Manager has authority to stop any construction activity contributing to dust levels which are excessive or in violation of Federal, State, or local laws. All expenses resulting from such a work stoppage is the responsibility of the Contractor.

3.10 SURFACE WATER CONTROL

A. Control all on-site surface water. Provide proper drainage so flooding of the site or adjacent property does not occur.

B. Provide and maintain ample means and devices with which to promptly remove and properly dispose of all water entering the site.

C. Immediately prior to suspension of construction operations for any reason, provide proper and necessary drainage of work area.

D. Provide berms or channels as necessary to prevent flooding or saturation of subgrade. Promptly remove all water collecting in depressions.

E. Dispose of water in a manner that will not cause damage to adjacent areas of facilities.

3.11 POLLUTION CONTROL

A. Soil: Prevent contamination of soil from discharge of noxious substances (including engine oils, fuels, lubricants, etc.) during construction operations. Excavate and legally dispose of any such contaminated soil off-site, and replace with acceptable compacted fill and/or topsoil.

B. Water: Prevent disposal of waste, effluent, chemicals or other such substances adjacent to or into streams, waterways, sanitary sewers, storm drains, or public waterways. Perform any emergency measures that may be required to contain any spillage.

C. Air: Control atmospheric pollutants. Develop a fugitive dust control plan and submit it to the Executive Secretary at the Division of Air Quality for approval prior to beginning construction activities.

3.12 EROSION CONTROL

A. Use measures such as berms, dikes, dams, sediment basins, fiber mat netting, gravel mulches, slopes, drains and other erosion control devices or methods to prevent erosion and sedimentation.

B. Provide construction and earthwork methods which control surface drainage from cut, fill, borrow, and waste disposal areas, to prevent erosion and sedimentation.

C. Inspect earthwork during execution to detect any evidence of the start of erosion. Apply corrective measures as required.

D. Obtain and execute a UPDES storm water discharge permit from the Division of Water Quality prior to beginning construction activities.

END OF SECTION

SECTION 01700

CONTRACT CLOSEOUT

PART 1 GENERAL

1.01 SECTION INCLUDES

A. Closeout procedures.

B. Final cleaning.

C. Adjusting.

D. Project record documents.

1.02 RELATED SECTIONS

A. Section 01500 - Construction Facilities and Temporary Controls: Progress cleaning.

1.03 CLOSEOUT PROCEDURES

A. Submit written certification that Contract Documents have been reviewed, Work has been inspected, and that Work is complete in accordance with Contract Documents and ready for Engineer's review.

B. Provide submittals to Engineer Owner that are required by governing or other authorities.

C. Submit final Application for Payment identifying total adjusted Contract Sum, previous payments, and sum remaining due.

1.04 FINAL CLEANING

A. Execute final cleaning prior to final project assessment.

B. Clean equipment and fixtures to a sanitary condition with cleaning materials appropriate to the surface and material being cleaned.

C. Clean site; sweep paved areas, rake clean landscaped surfaces.

D. Remove waste and surplus materials, rubbish, and construction facilities from the site.

1.05 ADJUSTING

A. Adjust operating Products and equipment to ensure smooth and unhindered operation.

1.06 PROJECT RECORD DOCUMENTS

A. Maintain on site one set of the following record documents; record actual revisions to the Work:

1. Drawings.

2. Specifications.

3. Addenda.

4. Change Orders and other modifications to the Contract.

5. Reviewed Shop Drawings, Product Data, and Samples.

6. Manufacturer's instruction for assembly, installation, and adjusting.

B. Ensure entries are complete and accurate, enabling future reference by Owner.

C. Store record documents separate from documents used for construction.

D. Record information concurrent with construction progress.

E. Specifications: Legibly mark and record at each Product section description of actual Products installed, including the following:

1. Manufacturer's name and product model and number.

2. Product substitutions or alternates utilized.

3. Changes made by Addenda and modifications.

F. Record Drawings: Legibly mark each item to record actual construction including:

1. See Record Drawing Section 00700 4.04 for details.

2. Final Payment will not be made until Record Drawings have been submitted to Engineers.

G. Submit documents to Engineer with claim for final Application for Payment.

PART 2 PRODUCTS

Not Used.

PART 3 EXECUTION

Not Used.

END OF SECTION

SECTION 02150

SHORING AND UNDERPINNING

PART 1 GENERAL

1.01 SECTION INCLUDES

A. Shoring for open excavations requiring a protective system.

1.02 REFERENCES

A. OSHA Construction Standards Chapter P: Excavations, Trenching, and Shoring.

1.03 RESPONSIBILITY

A. Contractor/Developer is solely responsible for safety. It is the Contractor/Developer's responsibility to adhere to all of OSHA's current regulations.

1.04 DEFINITIONS

A. Accepted Engineering Practices: Those requirements or practices which are compatible with standards required by a duly licensed or recognized authority.

B. Benching: A method of protecting persons and property against cave-ins by excavation the sides of an excavation to form one or a series of horizontal levels or steps, usually with vertical or near-vertical surfaces between levels.

C. Excavation: Any man-made cut, cavity, or depression in an earth surface, including trenches, formed by earth removal and producing unsupported earth conditions (sides). If installed forms or similar structures reduce the depth-to-width relationship, and excavation may become a trench.

D. Failure: The permanent deformation or breakage of a structural member or connection; or the collapse of all or part of an excavation.

E. Protective System: Any recognized method of protecting persons and property against cave-ins, the collapse of adjacent structures, or material that may fall or roll from an excavation side or into and excavation. Protective systems include support systems, sloping and benching systems and shield systems.

F. Shield/Trenchbox: A structure that is able to withstand the forces imposed on it by a cave-in and thereby protect persons and property within the structure without preventing a cave-in. Shields may be permanent structures or may be designed to be portable and moved along as work progresses. Portable shields used in trenches are usually referred to as "trench boxes" or "trench shields".

G. Shoring: A structure that supports the sides of an excavation and thereby protects persons and property by preventing cave-ins.

H. Sides: A vertical or inclined earth surfaces formed at the outer edges of an excavation.

I. Sloping: A method of protecting persons and property against cave-ins by excavation to form sides that are inclined away from the excavation, the angle on incline being of such a degree for the conditions of exposure that a cave-in will not occur.

J. Support System: A structure which protects persons and property by providing support to an adjacent structure, underground installation, or the sides of an excavation.

K. Trench: A narrow excavation made below the surface of the ground. In general, the depth is greater than the width, but the width of a trench is not greater than 15 feet.

1.05 DESIGN OF PROTECTIVE SYSTEMS

A. Use professional engineer to design support systems, shield systems, and the structural components of these systems, and sloping and benching systems to resist without failure all loads that are intended to be imposed or transmitted to them.

B. Fully compensate in design procedures for hydrostatic pressure in the excavation sides.

PART 2 PRODUCTS

2.01 MATERIALS

A. Materials shall be as per 1.05 of this section

PART 3 EXECUTION

3.01 STABILITY OF ADJACENT STRUCTURES

A. Use support systems such as shoring, bracing, or underpinning where stability of adjoining buildings, walls, sidewalks, pavements, or other structures is endangered by excavation operations.

3.02 INSPECTIONS

A. Contractor/Developer shall employ and have on site at all times a competent person, as defined by OSHA, who is responsible for excavation inspection.

B. Inspect excavations daily for evidence of possible cave-ins, indications of failure of protective systems, or other hazardous conditions.

C. Upon discovery of hazardous conditions, cease all work in the excavations until additional precautions have been taken to ensure persons and property safety.

3.03 ADDITIONAL REQUIREMENT FOR TRENCH EXCAVATION

A. Do not excavate material to a level greater than 2 feet below the bottom of the members of a support system if the system is designed to resist the forces calculated for the full depth of the trench, and indications of a possible cave-in below the bottom of the support system are not evident while the trench is open.

END OF SECTION

SECTION 02205

COMMON FILL

PART 1 GENERAL

1.01 SECTION INCLUDES

A. Common fill material requirements.

1.02 REFERENCES

A. AASHTO M 145: Recommended Practice for the Classification of Soils and Soil-Aggregate Mixtures for Highway Construction Purposes.

B. AASHTO T-27: Standard Method for Sieve Analysis of Fine and Coarse Aggregates.

C. Rule R 309-550-8(3) Installation of Water Mains

D. ASTM D2774: Recommended Practice for Underground Installation of Thermoplastic Pressure Piping and PVC Pipe

E. AWWA Manual M23: PVC Pipe – Design and Installation

1.03 DEFINITIONS

A. Common Fill: Backfill material which is <u>not</u> mechanically graded.

1.04 ACCEPTANCE

A. Acceptance of common fill shall be determined by Engineer and based upon 1 sublot of 500 tons plus any additional sublots for each 500 tons or portion thereof over and above the first 500 tons of each common fill placed in any 1 week.

B. Engineer reserves the right to select and test backfill on a random basis from any location in the Work, on the site or from the backfill source.

PART 2 PRODUCTS

2.01 BORROW

A. Bank run material: free of shale, clay, slag, friable material and debris.

B. Sound, earthen material with 95% - 100% passing the 4 inch sieve.

C. Percent of material by weight passing Number 200 sieve shall not exceed 20% when tested in accordance with AASHTO T-27

2.02 IMPORT / GRANULAR FILL (AASHTO TYPE A-1-a)

A. Well graded material meeting A-1-a classification.

B. The material must be within the following limits:

Sieve Size	Percent by Weight Passing Sieve
4 inches	95 - 100
No. 4 (4.75 mm)	30 to 70
No. 200 (75 micro m)	3 to 15

2.03 SAND

A. Clean, coarse, natural sand.

B. Non-plastic when tested in accordance with ASTM D 4318.

C. 100 percent shall pass a ½ inch screen.

D. No more than 20 percent shall pass a number 200 screen.

2.04 SOURCE QUALITY CONTROL

A. Verify gradation compliance in accordance with AASHTO T-27. Select samples uniformly in time on a random basis.

PART 3 EXECUTION

3.01 INSTALLATION

A. Excavation and Backfill Operations: In accordance with Section 02225.

END OF SECTION

SECTION 02206

SELECT FILL

PART 1 GENERAL

1.01 SECTION INCLUDES

A. Select fill material requirements.

1.02 REFERENCES

A. AASHTO T-96: Standard Test Method for Resistance to Degradation of Small-Size Coarse Aggregate by Abrasion and Impact in the Los Angeles Machine.

B. AASHTO T-27: Standard Method for Sieve Analysis of Fine and Coarse Aggregates.

1.03 DEFINITIONS

A. Select Fill: Backfill material which is mechanically graded.

1.04 SUBMITTALS

A. Material analysis of each select fill material to be used.

1.05 ACCEPTANCE

A. Engineer reserves the right to select, reject, and test backfill on a random basis from any location in the Work or from the backfill source.

PART 2 PRODUCTS

2.01 AGGREGATES – UNTREATED BASE COURSE(UBC) & PEA GRAVEL

A. Clean, hard, tough, durable and sound mineral aggregates that consists of 95% crushed stone, crushed gravel or crushed slag; free of deleterious and organic matter; and complies with the following:

1. Aggregate Wear Under AASHTO T-96: Less than 50 percent.

2. Material shall be classified as A-1 material.

3. Aggregates - master grading band limits

a. The following limits are based on fine and course aggregate having approximately the same bulk specific gravities. The limits are wider than necessary for good job control. Sieve gradations are based upon Percent of aggregate passing by weight in accordance with AASHTO T-27 and T-11.

MASTER GRADING BAND LIMITS

Sieve Size	UNTREATED BASE COURSE(UBC) Type 1 Min	Max	Type 3/4 Min	Max	PEA GRAVEL Min	Max
1-1/2"	--	--	--	--	--	--
1"	100	--	--	--	--	--
3/4"	--	--	100	--	--	--
1/2"	79	91	--	--	--	--
3/8"	--	--	78	92	--	--
No. 4	49	61	55	67	100	--
No. 16	27	35	28	38	--	3
No. 200	7	11	7	11	--	2

4. State Untreated Base Course is approved for use, refer to most current State Specification for gradation limits of the material.

5. Source quality control

   a. Verify job-mix grading band material compliance in accordance with AASHTO T-27. Select samples uniformly in time on a random basis.

B. Pea Gravel shall only be used with Engineer's approval.

2.02 DRAIN ROCK

A. Consist of hard, durable particles of stone or gravel, screened or crushed to specified size and gradation.

B. Free from vegetable matter, lumps or balls of clay, or other deleterious matter.

C. Crush or waste coarse material and waste fine material as required to meet gradation requirements.

D. Durability Index: Percentage of wear not greater than 40 percent when tested in accordance with AASHTO T-96.

E. Conform to size and grade within the limits as follows when tested in accordance with AASHTO T-27.

	¾ “ Drain Rock	1-1/2” Drain Rock	3” Drain Rock
SIEVE SIZE (Square Openings)	PERCENT BY WEIGHT PASSING SIEVE	PERCENT BY WEIGHT PASSING SIEVE	PERCENT BY WEIGHT PASSING SIEVE
4 inch	100	100	100
3 inch	100	100	95-100
2 inch	100	100	50-100
1-1/2 inch	100	95-100	15-55
3/4 inch	95-100	50-100	0-20
3/8 inch	15-55	15-55	0-15
Number 4	0-10	0-25	0-10
Number 8	0-5	0-5	0-5
Number 200	0-2	0-2	0-2

2.03 GRAVEL

A. Consist of hard, durable particles or fragments of stone or gravel, screened or crushed to specified sizes and gradations.

B. Free from vegetable matter, lumps or balls of clay, alkali, adobe, or other deleterious matter.

C. When sampled and tested in accordance with specified test methods, material shall comply with the following requirements:

1. Durability index: Percentage of wear not greater than 40 percent after 500 revolutions when tested in accordance with ASTM C 131.

2. Plasticity Index: Not greater than 5 when tested in accordance with ASTM D 4318.

3. Liquid limit: Not greater than 25 percent when tested in accordance with ASTM D 4318.

D. Conform to sizes and grade within the limits as follows when tested in accordance with ASTM C 136 and ASTM C 117:

Sieve Size (Square Openings)	Percent By Weight Passing Sieve
3 inch	--
1-1/2 inch	100
Number 4	30-70
Number 8	20-60
Number 30	10-40
Number 200	0-12

2.04 BEDDING SAND

A. Friable river or bank aggregate, free of loam and organic matter. Graded as follows.

SIEVE	PERCENT PASSING BY WEIGHT
3/8 inch	100
Number 100	0-10

PART 3 EXECUTION

3.01 INSTALLATION

A. Excavation and Backfill Operations: In accordance with Section 02225.

END OF SECTION

SECTION 02225

EXCAVATION AND BACKFILL OPERATIONS

PART 1 GENERAL

1.01 SECTION INCLUDES

A. Requirements for trenching and backfilling for underground pipelines.

B. Excavating and backfilling operations adjacent to and under structures including boxes, headwalls, or other structures as required by City Engineer.

C. Backfilling and compacting operation for construction and reconstruction of roadways, embankments, streets, parking lots, and other paved surface areas.

D. Excavation permit requirements.

1.02 DEFINITIONS

A. Pipe Zone: That zone in an excavation which supports, surrounds, and extends to 1 foot above the top of the pipe barrel.

B. Bedding: Process of preparing the trench bottom to receive the pipe and the backfilling on each side of the pipe to 12 inches over the top of the pipe.

C. Roadway: Area within the street right-of-way, including the area under the street, curb, gutter, and one (1) foot behind curb.

1.03 SUBMITTALS

A. Cut Sheets: In accordance with Section 00700.

B. Material Analysis Reports: In accordance with Sections 02205 or 02206 as applicable.

C. Density Test Reports: In accordance with Section 02250.

D. Depth of backfill lift. This information shall be contingent upon type of equipment used in compaction operation. Engineer may order lesser thickness if compaction is not achieved.

1.04 STORAGE AND HANDLING

A. Stockpile excavated material in a manner as to cause a minimum of inconvenience to public travel and provide for emergency traffic as necessary.

B. Maintain free access to all existing fire hydrants, water and gas valves, and meters.

C. Maintain clearance for free flow of storm water in all gutters, conduits, and natural water courses.

D. Utilize appropriate traffic signs, markers, and procedures in all product storage and handling activities.

E. Promptly remove all other material from site.

1.05 SITE CONDITIONS

A. Unsuitable Weather Limitations: Do not place, spread, or roll any fill material during unsuitable weather conditions. Do not resume operations until moisture content of material is satisfactory.

B. Protection of Graded Areas: Protect graded areas from traffic and erosion. Keep free of trash and debris. Repair and re-establish grades in settled, eroded, and rutted areas to specified tolerances.

C. Reconditioning Compacted Areas: Where completed compacted areas are disturbed by subsequent construction operations or unsuitable weather, scarify surface, reshape, and compact to required density prior to further construction.

D. Prior to excavation operations, photograph existing surfaces along which Work may take place in order to determine, after construction is completed, whether any damage of existing improvements occurred prior to construction operations.

E. Grading: In compaction operations, do not vary the surface of finished aggregate base course more than 1/4" above or below grade.

PART 2 PRODUCTS

2.01 WATER

A. Make arrangements for source of water during construction and make arrangements for delivery of water to site. Comply with all local laws and regulations when securing water from water utility company at no additional cost to City.

2.02 SOIL MATERIALS

A. Over-excavation Fill: Select Fill: in accordance with Section 02206.

B. Common Fill: in accordance with Section 02205.

C. Select Fill: in accordance with Section 02206.

D. Native Backfill:

1. When approved by City Engineer, native backfill material obtained from project excavations may be used as backfill, provided organic material, rubbish, debris,

rocks larger than 8 inches, and other objectionable materials are removed.

2. Bituminous pavement obtained from project excavations will not be permitted as backfill except for the following:

   a. May be mixed with road subbase if material meets section 02205.2.01 gradation.

PART 3 EXECUTION

3.01 EXAMINATION

A. Verify areas to be backfilled are free of debris, snow, ice, or water and ground surfaces are not frozen.

B. Verify foundation of basement walls are braced to support surcharge forces imposed by backfilling operations.

C. Immediately prior to suspension of construction operations for any reason, provide proper and necessary drainage of work area.

3.02 PREPARATION

A. For pipelines, use means necessary to avoid displacement, and injury to, pipe and structures while compacting soil or operating equipment next to pipeline.

B. Movement of construction machinery over a pipeline at any stage is solely at Contractor's risk.

C. When excavation is required in jurisdictions other than City, satisfy all conditions of the appropriate agencies.

D. Identify required lines, grades, contours, and benchmarks.

E. Notify all affected utility companies and Blue Stakes prior to commencing excavation operation.

F. Support and protect from damage, until completion of the Work, any existing facilities and structures which exist in, pass through, or pass under the site.

3.03 CONTROL OF GROUNDWATER

A. All trenches shall be kept free from water during excavation, fine grading, pipe laying, jointing, and embedment operations.

B. Where the trench bottom is mucky or otherwise unstable because of the presence of groundwater, and in cases where the static groundwater elevation is above the bottom of any trench or bell holed excavation, such groundwater shall be lowered to the extent necessary to keep the trench free from water and the trench bottom stable when the work

within the trench is in progress.

3.04 SHORING

A. Comply with Section 02150 when required by field condition.

3.05 GENERAL EXCAVATION OPERATIONS

A. If topsoil is on site, remove and store it for later use on site.

B. Excavate site to required grade for Work. Use all means necessary to control dust on or near Work and on or near all off-site borrow and disposal areas.

C. Notify Engineer of unexpected subsurface conditions.

D. Underpin adjacent structure which may be damaged by excavation work, including service utilities and pipe chases.

E. If unstable material is encountered at the bottom or face of excavation, do not perform extra excavation without Engineer's written approval. Correct unauthorized extra excavations at no cost to City.

F. Provide necessary protection to excavation walls as required. If conditions permit, slope excavation side to maintain a safe and clean working area. Remove loose materials.

G. Correct excavation beyond the specified lines and grades by filling the resulting voids with approved compacted fill. If the fill is to become the subgrade for other fill, use material approved by Engineer. Do not proceed until Engineer has approved the material and the proposed method of backfilling for over excavation errors.

3.06 EXCAVATION FOR PIPELINES

A. Trenches shall be excavated to the depths and widths required to accommodate the construction of the pipelines, as follows:

1. All additional excavation necessary for preparation of the trench bottom shall be made manually.

2. Excavation for trenches in ledge rock, cobble rock, stones, mud or other material unsatisfactory for pipe foundation, shall extend to a depth of at least 6 inches below the bottom of the pipe.

3. A bedding of special material shall be placed and thoroughly compacted with pneumatic tampers in 6-inch lifts to provide a smooth, stable foundation.

4. Special foundation material shall consist of suitable earth material free from roots sod or vegetable matter.

5. Trench bottoms shall be hand shaped as specified in paragraph (1) above.

6. The maximum width of trench, measured at the top of the pipe, shall be as narrow as possible but a minimum of 6 inches on each side of the pipe.

7. Where ground water is encountered, clay dikes and/or filter fabric may be required at a minimum of 100 feet or as directed by the City Engineer.

B. Grade bottom of trenches to provide uniform bearing surface.

C. If necessary, make bellholes and depressions required to complete joining of pipe or box.

D. In public thoroughfares and regardless of trench depth, safely barricade and limit open trenches to a maximum of 200 lineal feet in the daytime, except in traveled roadways where a maximum of 80 lineal feet of open trench will be allowed.

E. Close trenches during nighttime conditions.

3.07 GRAVEL FOUNDATION FOR PIPE

A. Wherever the subgrade material does not afford a sufficiently solid foundation to support the pipe and superimposed load; where water must be drained to maintain a dry bottom for pipe installation and at other locations as previously defined, the subgrade shall be excavated to a minimum of 12 inches and replaced with crushed rock or gravel.

B. Gravel for pipe foundations shall conform Drain Rock in Section 02206.

C. Drain Rock material shall be deposited over the entire trench width in 18-inch maximum layers, each layer shall be compacted by tamping, rolling, or vibrating.

D. The material shall be graded to produce a uniform and continuous support for the installed pipe.

3.08 BACKFILLING FOR PIPELINES

A. Backfill shall be carefully placed around and over pipes and shall not be permitted to fall directly on a pipe from such a height, or in such a manner as to cause damage.

B. Bedding requirements are as defined in the Specifications for each specific pipe material.

C. Trench backfilling above the level of the pipe bedding shall normally be accomplished with A-1 material. Native excavated materials shall be free from rocks larger than 8-inches in diameter.

D. Compaction Requirements

1. The standard proctor used for all A-1 materials shall be the laboratory standard maximum dry density as determined by AASHTO T-180.

2. The standard proctor used for all materials other than A-1 materials shall be the laboratory standard maximum dry density as determined by AASHTO T-99.

3. Under pavements, shoulders, or other surface improvements the in-place density shall be a minimum of 95% of laboratory standard maximum dry density as determined by AASHTO T-180.

4. In other areas the in-place density shall be a minimum of 92% of the maximum dry density as determined by the same laboratory method

E. Clay cut off dikes shall be constructed as required by City Engineer.

3.09 STRUCTURAL EXCAVATION

A. Provide all required shoring, cribs, cofferdams, and caissons including all pumping, bailing, draining, sheathing, bracing, and related items.

B. If conditions permit, slope excavation sides as excavation progress to maintain a safe and clean working area as required by OSHA.

C. Support excavation. Do not interfere with the bearing of adjacent foundations, pipelines, etc.

D. All unauthorized excavation below the specified structure subgrade shall be replaced with concrete, monolithic with that of the slab above or with coarse gravel thoroughly compacted into place.

E. Subgrade soil for all concrete structures shall be firm, dense, thoroughly compacted, and consolidated.

F. Subgrade soil shall be free from mud and muck; and shall be sufficiently stable to remain firm and intact under the feet of the workmen engaged in subgrade surfacing, laying reinforcing steel, and depositing concrete.

G. Coarse gravel or crushed stone may be used for subsoil reinforcement if results satisfactory to the City Engineer can be obtained thereby.

1. Material shall be applied in lifts of 6" or less.

2. Each lift shall be embedded in the subsoil by thorough tamping.

3. All excess soil shall be removed to compensate for the displacement of the gravel or crushed stone and the finished elevation of any subsoil reinforced in this manner shall not be above the specified subgrade.

3.10 BACKFILLING FOR STRUCTURES

A. Do not fill adjacent to structures until approval is obtained from Engineer.

B. All forms shall be removed and the excavation shall be cleaned of all trash and debris.

C. Backfill areas to contours and elevations indicated. Do not use frozen materials.

D. Do not use compaction equipment adjacent to walls or retaining walls that may cause wall to become overstressed or moved from final alignment.

E. Place select fill a minimum of 3 feet around the outside of structures.

F. Place and compact select fill materials in continuous lifts not exceeding 12" loose depth.

G. Place and compact common fill material in continuous lifts not exceeding 8" loose depth.

H. Do not disturb or damage foundation perimeter drainage, foundation, dampproofing, foundation waterproofing and protective cover, or utilities in trenches.

I. Backfill against foundation walls simultaneously on each side. Do not backfill against walls until concrete has obtained 7 day strength.

J. Make smooth changes in grade. Blend slopes into level areas.

K. Remove surplus backfill materials from site.

L. Leave stockpile areas completely free of excess fill materials.

M. Slope grade away from structure at a minimum of 3" in 10 feet unless otherwise indicated.

N. Compaction: Each layer of material shall be compacted by hand or machine tampers or by other suitable equipment to a density equal to 95% of maximum dry density as measured by AASHTO T-180.

O. Restore any damaged structure to its original strength and condition and rebackfill to specifications.

3.11 ROADWAY EXCAVATIONS

A. In advance of setting line and grade stakes, clean subgrade area of brush, weeds, vegetation, grass, and debris. Drain all depressions or ruts which contain water.

B. A soils classification, as determined by AASHTO T-27, shall be made on the proposed subgrade, and the following shall be required based on that classification, or as approved by the City Engineer.

Road Subgrade Preparation Schedule

Soil Classification	Requirement
A-1	The subgrade shall be moistened and compacted to the equivalent of 95% of maximum dry density as measured by AASHTO T-180 and in accordance with Section 02250.
A-2, A-3, A-4 or A-5	The subgrade shall be over-excavated a minimum of 12 inches and replaced with A-1-a import / granular material, and be moistened and compacted as above.
A-6 or A-7	The subgrade shall be over-excavated a minimum of 18 inches and replaced with A-1-a import / granular material, and be moistened and compacted as above.

C. No organic material, soft clay, spongy material, or other deleterious material will be permitted in the scarified or imported subgrade layer.

D. Rough subgrades shall be shaped and graded to within a tolerance of 0.15 feet of design grade and drainage shall be maintained at all times.

E. Moisture content of the subgrade layer shall be maintained at not less than 95% or more than 105% of optimum moisture content, during the compaction process. The entire roadbed, to one foot in back of curb, must be compacted to the specified density to a minimum depth of 8 inches.

F. If removal of boulders, rubble, or existing improvements, found within the excavated area results in a lower excavation elevation than indicated, backfill over excavation in a manner approved by Engineer.

G. Remove all deposits susceptible to frost heave.

H. Excavations through or under City streets, sidewalks, street shoulders, driveways, etc. shall comply with the following requirements:

1. Material removed by excavation is not to be used as backfill or placed back into the trench under any paved portion of the street. However, sand may be used for backfill up to one foot above top of pipe.

2. The remaining trench shall be filled with select fill as per Section 02206.

3. The trench shall be filled to the existing asphalt level and guarded from traffic until set.

4. Within 10 days of the fill, sufficient fill material shall be removed and replaced with material comparable to the adjacent surface material shall meet the requirements of Section 02504 of these specifications.

5. The City Engineer shall inspect all work.

3.12 SUBGRADE PREPARATION

A. Compact subgrade surfaces to density specified for overlying backfills. Refer to Section 02250.

B. If areas of subgrade not readily capable of in-situ compaction, secure City Engineer's authorization for extra excavation and backfill.

C. Maintain minimum overburden cover of 2 feet over pipelines or conduits during subgrade preparation.

3.13 BACKFILLING FOR PAVEMENT

A. Before beginning backfilling operations obtain Engineer's approval of excavation operation.

B. Do not damage subsurface structures or service lines.

C. Process backfill and avoid segregation. Keep base course free from pockets of coarse or fine material.

D. Deposit base course on the roadbed in a uniform manner which will provide the required compacted thickness. Maintain moisture content.

E. Shoulders are an integral part of the embankment. Do not build shoulders to a grade higher than that of the adjacent granular base course. Maintain efficient surface runoff at all times.

F. Compaction: in accordance with Section 02250.

G. Prior to placing pavements, proof roll in accordance with Section 01450.

3.14 BLASTING

A. Blasting will not be allowed except by permission from the City Engineer.

1. The Contractor shall comply with all laws, ordinances, and applicable safety code requirements and regulations relative to the handling, storage, and use of explosives and protection of life and property.

2. And he shall be fully responsible for all damage attributable to his blasting operations.

3. Excessive blasting or overshooting will not be permitted and any material outside the authorized cross-section which may be shattered or loosened by blasting shall be removed by the Contractor.

3.15 COMPACTION OF BACKFILL

A. In accordance with Section 02250.

3.16 IMPORTED BACKFILL MATERIAL

A. In the event the native excavated material is not satisfactory for backfilling as determined by the City Engineer, the Contractor shall provide imported granular fill in accordance with Section 02205.

3.17 DISPOSAL OF EXCESS MATERIALS

A. All excess material shall be hauled away from the construction site and disposed of by the Contractor. Contractor shall verify location permits to accept excess material type.

B. Any excess material left on site shall be leveled and landscaped as approved by City Engineer.

END OF SECTION

SECTION 02245

LOW DENSITY CONCRETE BACKFILL – FLOWABLE FILL

PART 1 GENERAL

1.01 SUMMARY

A. Section Includes: Low density concrete backfill.

1.02 REFERENCES

A. American Society for Testing and Materials (ASTM):

1. ASTM C 150 - Specification for Portland Cement.

1.03 SYSTEM DESCRIPTION

A. Performance Requirements

1. Low Density Concrete Backfill:

a. Dry in-place density of not less than 30 pounds per cubic foot and not more than 36 pounds per cubic foot.

b. 28 day compressive strength shall be between 100 psi and 150 psi.

1.04 SUBMITTALS

A. Submit the proposed mix design.

PART 2 PRODUCTS

2.01 MANUFACTURERS

A. Pregenerated foam: One of the following or equal:

1. Mearl Corporation, Roselle Park, N.J., Mearl Geofoam Liquid.

2.02 MATERIALS

A. Low Density Concrete Backfill Components:

1. Type II low alkali Portland cement.

2. Water.

3. Aggregate: Pregenerated foam, vermiculite, or other low weight aggregate material which will conform to the strength and density requirements specified herein.

PART 3 EXECUTION

3.01 INSTALLATION

A. General

1. Low density concrete (flowable fill) may only be used for backfill when approved by the City.

2. Place low density concrete backfill in a manner so that minimal consolidation of the material occurs during and after placement.

a. Monitor wet density of the placed low density concrete backfill, and submit data on a daily basis.

b. At no time shall wet density exceed 48 pounds per cubic foot.

B. Metal plates shall be placed over trench for 48 hours to protect concrete.

END OF SECTION

SECTION 02250

SOIL COMPACTION

PART 1 GENERAL

1.01 SECTION INCLUDES

A. Compaction control of native and imported backfill material.

1.02 REFERENCES

A. AASHTO M 145: Recommended Practice for the Classification of Soils and Soil-Aggregate Mixtures for Highway Construction Purposes.

B. AASHTO T-99: Standard Test Methods for Moisture-Density Relations of Soils and Soil-Aggregate Mixtures, Using 5.5-lb (2.49-kg) Hammer and 12-In. (305-mm) Drop.

C. AASHTO T-180: Standard Test Methods for Moisture-Density Relations of Soils and Soil-Aggregate Mixtures, Using a 10-lb (4.54-kg) Hammer and an 18-In. (457-mm) Drop.

D. AASHTO T-238: Standard Test Methods for Density of Soil and Soil-Aggregate in Place by Nuclear Methods (Shallow Depth).

1.03 DEFINITIONS

A. A-1 Soils: AASHTO M 145 describes the nature of these soils.

B. Modified Proctor: The test method used for moisture-density relationship of soils as determined by the ASTM D 1557 test method.

C. Percent Compaction or Percent Density: The ratio of the field dry density to the laboratory maximum dry density expressed as a percentage.

D. Standard Proctor: The test method used for moisture-density relationship of soils as determined by the ASTM D 698 test method.

1.04 WARRANTY

A. Correct deficient conditions. Replace or repair surfacing materials and damaged facilities.

B. The method of construction repair shall be proposed in writing by Contractor for approval by Engineer prior to correcting the failed condition.

C. Failure to detect any defective work or material does not prevent later rejection of the work nor obligate Engineer for final acceptance when such defective work or material is discovered.

PART 2 EXECUTION

2.01 COMPACTION REQUIREMENTS

A. Compaction Control and Testing is to be provided by the developer/contractor. Test intervals should not exceed 200 feet or at a minimum of 2 tests per working day, whichever is greater. All test results will need to be sent to the City Engineer within 24 hours after the test is complete; otherwise they will be considered null. All testing will need to be verified by the inspector. This applies to failing results as well.

B. All manholes, catch basins, valve boxes and vertical structures shall be compacted using a jumping jack type device with maximum lifts not to exceed 6 inches or as recommended by jumping jack manufactures. Density tests shall be taken at every manhole, catch basin, valve box and vertical structures.

C. The Developer\Contractor shall be responsible to perform and pay for all testing of earth materials.

D. Moisten or de-water backfill material to obtain optimum moisture for compaction compliance.

E. The material shall be deposited in horizontal layers having a compacted thickness of no more than 12 inches for roadway and 12 inches for trenches.

F. The distribution of materials shall be such that the compacted material will be homogeneous and free from lenses, pockets, or other imperfections.

G. The material shall have the optimum moisture content required for the purpose of compaction and the moisture content shall be uniform throughout the layer, insofar as practicable.

H. Backfill shall be compacted by means of sheepsfoot rollers, pneumatic tire rollers, vibrating rollers, or other mechanical tampers of a size and type approved by the City Engineer.

I. If the required relative density is not attained, test sections will be required to determine any adjustments in compacting equipment, thickness of layers, moisture content and compactive effort necessary to attain the specified minimum relative density.

J. Approval of equipment, thickness of layers, moisture content and compactive effort shall not be deemed to relieve the Contractor of the responsibility for attaining the specified minimum relative densities.

K. The Contractor in planning his work shall allow sufficient time to perform the work connected with test sections and to permit the City Engineer to make tests for relative densities.

2.02 FIELD QUALITY CONTROL

A. Optimum Soil Density: Unless indicated otherwise.

1. In accordance with AASHTO T-180 Method D test (Modified Proctor).

2.03 COMPACTION UNDER ROADWAYS

A. Fill or embankment material shall be compacted to not less than 95% of maximum dry density as measured by AASHTO T-180.

B. Compaction shall extend one foot beyond proposed curb line.

2.04 COMPACTION UNDER SIDEWALKS, CURB AND GUTTER, AND DRIVEWAYS

A. Fill or embankment material shall be compacted to not less than 95% of maximum dry density as measured by AASHTO T-180.

B. Compaction of material shall extend to at least one foot each side of the edge of the slab.

2.05 COMPACTION OF OTHER FILLS AND EMBANKMENTS

A. Fill or embankment materials other than those mentioned above shall be compacted to not less than 92% of maximum dry density as measured by AASHTO T-180.

END OF SECTION

SECTION 02504

ASPHALT CONCRETE

PART 1 GENERAL

1.01 SECTION INCLUDES

A. This is a material specification for hot mix and cold mix bituminous paving mixtures.

1.02 REFERENCES

A. AASHTO T-27: Standard Method for Sieve Analysis of Fine and Coarse Aggregate.

B. AASHTO M-17: Standard Specification for Mineral Filler for Bituminous Paving Mixtures.

C. AASHTO T-165: Standard Test Method for Effect of Water on Cohesion of Compacted Bituminous Mixtures.

D. AASHTO T-245: Standard Test Method for Resistance to Plastic Flow of Bituminous Mixtures Using Marshall Apparatus.

E. AASHTO T-246: Standard Test Methods for Resistance to Deformation and Cohesion of Bituminous Mixtures by Means of Hveem Apparatus.

F. AASHTO T-182: Standard Test Method for Coating and Stripping of Bitumen-Aggregate Mixtures.

G. AASHTO M-156: Standard Specification for Hot-Mixed, Hot-Laid Bituminous Paving Mixtures.

H. ASTM D 4215: Standard Specification for Cold-Mixed, Cold-Laid Bituminous Paving Mixture.

1.03 DEFINITIONS

A. Traffic Classifications:

1. Class I: Parking lots, driveways, light traffic residential streets, light traffic farm roads.

2. Class II: Residential streets, rural farm and residential roads.

3. Class III: Urban minor collector streets, rural minor collector roads.

4. Class IV: Urban minor arterial and light industrial and light industrial streets, rural major collector and minor arterial highways.

5. Class V: Urban freeways, expressways and principal arterial highways, rural interstate and other principal arterial highways.

1.04 SUBMITTALS

A. Mix Design: Submit each proposed mix design 14 days prior to use in the Work. Include in the report the following information.

1. Mix design method (Rice or Marshall).

a. For Marshall, use a five (5) point design.

2. Job control target data for aggregate ideal grading.

3. Permissible range limits of bitumen content in mixture.

4. Mixture's index of retained strength, AASHTO T-165

5. Additives. If none, state none are required.

6. Percent voids.

B. Source Aggregate Sample Report. Indicate rodded weight of aggregate, percentage of wear, weight loss, sand equivalent value, percent of fractured faces, amount of organic matter, plasticity of fines, and percentage of fines retained on the aggregate.

C. Pre-Approved Mix Design Data: If supplier has on record, a City approved mix design, submit name and address of supplier for each mix design 3 days prior to using asphalt concrete mix.

1.05 QUALITY ASSURANCE

A. Bitumen weights shall be determined by the mix design.

B. Use asphalt cement when recycled asphalt mixtures are indicated.

C. Do not change source of supply of paving asphalt or aggregate without Engineer's written approval.

D. Each shipment of bituminous material shall be uniform in appearance and consistency with no foaming when heated to the specified mixing temperature.

E. Do not use storage containers contaminated with other asphalt types or grades.

F. Gradation, asphalt content, marshall density, and maximum density shall be determined.

PART 2 PRODUCTS

2.01 PAVING ASPHALT

A. Provide type and grade indicated.

B. The mix design shall target 3.25% voids. However, the percent asphalt or fines may need to be adjusted to achieve optimal strength.

2.02 AGGREGATES - MATERIALS

A. Clean, hard, tough, durable and sound mineral aggregates that consist of crushed stone, crushed gravel, or crushed slag conforming to the following requirements:

1. Rodded Weight density; not less than 75 pounds per cubic foot.

2. Percentage of wear of coarse aggregate retained on the No. 8 sieve; not exceeding 40 unless specific aggregates having higher values are known to be satisfactory.

3. Weight loss; not exceeding 16 percent by weight when subject to 5 cycles of sodium sulfate.

4. The combined aggregate after going through the dryer shall have a sand equivalent value of not less than 50 percent.

B. Coarse Aggregate: Use an aggregate that the portion retained on the No. 4 sieve has not less than 50 percent of particles by weight with at least two mechanically fractured faces or clean angular faces.

C. Fine Aggregate:

1. Fine aggregate passing the No. 4 sieve may be either a natural or manufacture product containing not more than 2 percent by weight of organic matter or other deleterious substances.

2. Aggregate passing the No. 40 sieve is non-plastic.

3. The weight of minus 200 mesh material retained in the aggregate, as determined by the difference in percent passing a No. 200 sieve by washing and dry sieving without washing, does not exceed 6 percent of the total sample weight.

D. Mineral Filler: When mix design indicated need, add as a separate ingredient; AASHTO M-17.

2.03 AGGREGATES - MASTER GRADING BAND LIMITS

A. Gradation D/M-1/2 will be used unless otherwise specified

B. The following gradations describe the total percent passing by weight, AASHTO T-27, and is based on fine and coarse aggregate having approximately the same bulk specific gravities.

MASTER GRADING BAND LIMITS				
	DENSE MIXTURES			
Sieve Size	**Type DM-3/4 Min**	**Max**	**Type DM-1/2 Min**	**Max**
1"				
3/4"	100			
½"	-----	-----	100	
3/8"	75	91	-----	-----
# 4	46	62	60	80
# 8	-----	-----	-----	------
# 16	22	34	28	42
# 50	11	23	11	23
# 200	5	9	5	9

2.04 AGGREGATES - JOB-CONTROL GRADING BAND LIMITS

A. The job control formula shall produce a smooth curve approximately paralleling the master grading band limits for the designated mix. If application of the tolerances results in a job control grading band outside the master grading band, the full job control tolerances shall apply. The following describes the job control grading bands.

JOB-CONTROL GRADING BAND LIMITS					
Sieve	**Amount Passing Sieve, weight %**				
Size	**1 Test**	**2 Tests**	**3 Tests**	**4 Tests**	**5 Tests**
>1/2	± 10	± 7.3	± 6.3	± 5.6	± 5.2
3/8	± 9	± 6.9	± 5.9	± 5.3	± 4.9
No. 4	± 9	± 6.7	± 5.7	± 5.2	± 4.8
No. 8	± 7	± 5.6	± 4.8	± 4.3	± 4.0
No. 16	± 7	± 5.2	± 4.6	± 4.2	± 3.9
No. 50	± 6	± 4.3	± 3.8	± 3.4	± 3.2
No. 200	± 3	± 2.4	± 2.0	± 1.8	± 1.7

2.05 MARSHALL MIX DESIGN

A. The Marshall mix design shall be based upon AASHTO T-245, traffic classifications, and the following.

MARSHALL MIX DESIGN REQUIREMENTS						
	CLASS I		CLASS II & III		CLASS IV & V	
	Min	Max	Min	Max	Min	Max
Number of Compaction Blows (each end of specimen)	34	35	50	50	75	75
Stability, lb	1500	-----	1500	-----	1750	-----
Flow, in 0.01 in. units	8	20	8	18	8	16
% Air Voids,						
Surfacing and Leveling	3	3.5	3	3.5	3	4
Base	3	6	3	6	3	6
Unconfined Compression Strength Retention, % (AASHTO T-165)	65	-----	65	-----	65	-----

B. Compensate for specific gravity and absorption of aggregate to determine bitumen content by laboratory testing.

C. Reclaimed Asphalt Pavement (RAP).

1. A maximum 15 percent by aggregate weight of RAP.

D. Dust to binder ratio should not be more than 1.4.

2.06 MIXING PLANT

A. Hot-mixed, hot-laid paving mixtures; AASHTO M-156.

2.07 SOURCE QUALITY CONTROL

A. Unconfined Compression Strength Retention: When crushed mineral aggregate which is thoroughly coated with bitumen has an index of retained strength less than 65 percent bring the strength into compliance by adding any of the following additives to the mix.

1. Antistripping agent.

2. Hydrated lime.

3. Portland cement.

B. Coating and Stripping of Bitumen-Aggregate Mixture: Immediately after mixing, the mixing shall meet the requirements of AASHTO T-182, whereby not more than 5 percent of the aggregate particles shall remain uncoated.

PART 3 EXECUTION

3.01 INSTALLATION

A. Plant Mix Bituminous Paving: In accordance with Section 02510.

END OF SECTION

SECTION 02505

EMULSIFIED ASPHALT SLURRY SEAL

PART 1 GENERAL

1.01 SECTION INCLUDES

A. This is a material specification and application specification for emulsified asphalt slurry seal.

1.02 REFERENCES

A. ASHTO T-27: Standard Method for Sieve Analysis of Fine and Coarse Aggregate.

B. AASHTO T-2: Sampling Mineral Aggregates.

C. AASHTO T-11: Materials Finer than No. 200 in Mineral Aggregate.

D. AASHTO 176: Sand Equivalent Value of Soils and Fine Aggregate.

E. AASHTO T-84: Specific Gravity and Absorption of Fine

F. AASHTO T-19: Unit Weight Aggregate.

G. AASHTO T-96: Resistance to Abrasion of Small Size Coarse Aggregate by use of the Los Angeles Machine.

H. AASHTO T-37: Sieve Analysis of Mineral Filler.

I. AASHTO T-40: Sampling Bituminous Materials.

J. AASHTO T-59: Testing Emulsified Asphalt.

K. AASHTO M-140: Specification for Emulsified Asphalt.

L. AASHTO T-49: Penetration 100 gm at 5 sec. 77°F (25°C).

M. ASTM D242: Mineral Filler for Bituminous Paving Mixtures.

1.03 DEFINITIONS

A. The slurry seal shall consist of a mixture of a state approved emulsified asphalt, mineral aggregate, water and specified additives, proportioned, mixed and uniformly spread over a properly prepared surface. The completed slurry seal shall leave a homogeneous mat, adhere firmly to the prepared surface, and have a friction resistant surface texture throughout its service life.

1.04 SUBMITTALS

A. Mix Design: Submit each proposed mix design 14 days prior to use in the Work.

PART 2 PRODUCTS

2.01 EMULSIFIED ASPHALT

A. The emulsified asphalt shall conform to Grade **CQS-1H** as specified in AASHTO M140. The asphalt emulsion shall be **CQS-1H**. Each shipment of emulsified asphalt shall be accompanied by a certificate of analysis / compliance from the manufacturer.

B. POLYMER MODIFIED EMULSION (Optional, if specified) The emulsified asphalt shall be **CQS-1HL, CQS-1HP, QS-1HL,** or **QS-1HP**. The polymer modifier shall be either a solid synthetic rubber or latex material. The polymer modifier shall be combined with the base asphalt or asphalt emulsion at a minimum rate of 3% solids by weight of asphalt prior to loading at the manufacturing plant. The polymer modified emulsion shall be compatible with the mix design developed for the conventional slurry seal.

2.02 AGGREGATES - MATERIALS

A. The mineral aggregate shall be manufactured (100% crushed) stone such as granite, slag, limestone, chat, or other high quality aggregate that is free from dirt, organic matter, clay balls, adherent films of clay, dust, or other objectionable matter.

B. The Contractor shall insure that all oversize aggregate and other objectionable matter are removed from the mineral aggregate utilized in the slurry seal mixture. Screening shall be required at the stockpile if there are problems created by oversize materials in the mixture.

2.03 AGGREGATES - GRADING BAND LIMITS

A. Gradation Type II will be used unless otherwise specified

B. The following gradations describe the total percent passing by weight, AASHTO T-27, and is based on fine and coarse aggregate having approximately the same bulk specific gravities.

GRADING BAND LIMITS							
	DENSE MIXTURES						
Sieve Size	Type I Min	Max	**Type II Min**	**Max**	Type III Min	Max	Stockpile Tolerance
3/8"	100		**100**		100		
# 4	100		**90**	**100**	70	90	+ or - 5%
# 8	90	100	**65**	**90**	45	70	+ or - 5%
# 16	65	90	**45**	**70**	28	50	+ or - 5%
# 30	40	65	**30**	**50**	19	34	+ or - 5%
# 50	25	42	**18**	**30**	12	28	+ or - 4%
#100	15	30	**10**	**21**	7	18	+ or - 3%
#200	10	20	**6**	**15**	5	15	+ or - 2%

2.04 AGGREGATES - JOB-CONTROL GRADING BAND LIMITS

A. The job mix gradation shall be within the gradation band for the desired type. After the target gradation has been submitted, then the percent passing each sieve shall not vary by more than the stockpile tolerance and still remain within the gradation band.

2.05 MINERAL FILLER

A. Portland Cement, hydrated lime, limestone dust, flyash, Aluminum sulfate, or other approved filler meeting the requirements of ASTM D242 shall be used if required by the mix design. They shall be considered as part of the dry aggregate. The quantity and type of filler, if required, shall be determined by the job mix design. It shall be used for one or more of the following reasons only: to improve the gradation of the aggregate to provide improved stability and workability of the slurry, or the increase the durability of the cured slurry.

2.06 WATER

A. Water for the slurry mixture shall be clear, potable, free from harmful soluble salts, and compatible with the slurry mixture. If the water is obtained from a source other than sanitary systems, such as a river, stream, or pond, a sample of the water must be tested and approved by the laboratory performing the mix design.

2.07 MIX DESIGN

A. The mix design shall be made with the same aggregate gradation that the Contractor will provide on the project. Sources of all materials shall be selected prior to the time when the mix design is prepared and the materials are required to be used in the work. Slurry seal mixture shall not be placed until a mix design, submitted by the Contractor, has been approved by the Project Manager. The exact proportions of asphalt emulsion, aggregate, mineral filler, additives, and water to be used in the preparation of the slurry seal shall be

determined by an approved testing laboratory experienced in slurry seal mix design procedures.

The approved slurry mix shall be a homogeneous mixture, sufficiently stable during the entire mixing / spreading period so that the emulsion does not break, there are no segregation of the fines from the coarse aggregate, and the liquid portion of the mix does not float to the surface. The amount and type of asphalt emulsion to be blended with aggregate shall be determined by the laboratory mix design. The set control additive shall be introduced into the slurry seal mixture by an approved method that will assure uniform distribution and proper control. The exact amount shall be determined by conditions in the field and indicated in the mix design. A minimum amount of water shall be used as necessary to obtain a workable and homogeneous mixture. The slurry seal mixture shall show no signs of uncoated aggregate or premature breaking of emulsion when applied to the pavement surface.

B. The mix design and all slurry seal materials shall be approved by the City Engineer prior to use. The component materials shall be within the following limits:

1.	Residual Asphalt	Type I: 10% - 16% Type II: 7.5% - 13.5% Type III: 6.5% - 12% Based on dry weight of aggregate
2.	Mineral Filler	0.5% - 2.0% Based on dry weight of aggregate
3.	Additives	As needed
4.	Water	As needed to achieve proper mix consistency

2.08 ADDITIVES

A. Additives may be used to accelerate or retard the break-set of the slurry seal, or improve the resulting finished surface. The quantity and type of set control additive, if required, shall be determined by the job mix design and conform to the applicable sections of ASTM D3910 and ISSA T102. The use of additives in the slurry mix shall be made initially in quantities predetermined by the mix design with field adjustments if required, after approval by the City Engineer.

PART 3 EXECUTION

3.01 EQUIPMENT - GENERAL

A. All equipment, tools, and machines used in performance of this work shall be maintained in satisfactory working condition.

3.02 MIXING EQUIPMENT

A. Mixing Unit. The slurry seal shall be mixed and applied with a machine designed and manufactured to lay slurry seal with a minimum aggregate capacity of eight (8) cubic yards to reduce the number of transverse joints. The slurry seal mixing machine shall be a continuous flow mixing unit, capable of delivering accurately predetermined proportions of aggregate, asphalt emulsion, and mineral filler (if required) to a revolving spiraled multi-blade mixer and of discharging the thoroughly mixed product on a continuous basis. The mixing unit shall be capable of thoroughly blending all ingredients together without violent action. The mixing machine shall be equipped with an approved fines feeder that provides an accurate metering device or method of introducing a predetermined proportion of mineral filler to the aggregate. The fines feeder shall be used only when mineral filler is part of the mix design. The mixing machine shall be equipped with a water pressure system and fog type spray bar. The machine shall be capable of mixing materials at preset proportions regardless of the speed of the machine and without changing machine settings.
Each mixing unit to be used in performance of the work shall be calibrated prior to construction. Previous calibration documentation covering the exact materials to be used may be accepted, provided it was made during the current calendar year. The documentation shall include an individual calibration of each material at various settings which can be related to the machine metering device(s).

Attached to the mixing machine shall be a mechanical squeegee distributor (spreader box) having a rubber-like material in contact with the surface to prevent unwanted egress of slurry. It shall prevent loss of slurry on varying grades and crown by adjustments to assure uniform spread. An appropriate mechanical device for lateral distribution of the slurry shall be operated within the spreader box. There shall be a steering device, a flexible strike-off, and a burlap or other approved drag. The spreader box shall be adjustable to widths from eight (8) to fifteen (15) feet to minimize the number of longitudinal joints. Broken slurry seal mixture shall not be allowed to collect in the spreader box or on the flexible strike-off.

3.03 SPREADING EQUIPMENT

A. The mixture shall be spread uniformly by means of a conventional surfacing spreader box attached to the mixer and equipped to agitate and spread the material evenly throughout the box. A front seal shall be provided to insure no loss of the mixture at the road contact point.

3.04 WEATHER LIMITATIONS

A. The slurry seal shall not be applied if either the pavement or air temperature is below 50 F(10 C) and falling, but may be applied when both pavement and air temperature are above 45 F(7 C) and rising. No slurry seal shall be applied when there is danger that the finished product will freeze before 24 hours. The mixture shall not be applied when weather conditions prolong opening to traffic beyond a reasonable time.

B. Moisture: Do not apply seal coat during rain, unsuitable weather, or if humidity prolongs curing.

3.05 NOTIFICATION AND TRAFFIC CONTROL

A. All homeowners and business affected by the paving shall be notified three days in advance of the surfacing. Should work not occur on the specified day, a new notification will be distributed.

B. Suitable methods shall be used by the contractor to protect the slurry seal from all types of vehicular traffic without damage. Opening to traffic does not constitute acceptance of the work. Traffic control shall in accordance with the MUTCD manual.

3.06 SURFACE PREPARATION

A. Immediately prior to applying the slurry seal the surface shall be cleared of all loose material, oil spots, vegetation, and other objectionable material. Any standard cleaning method will be acceptable. If water is used, cracks shall be allowed to dry thoroughly before slurry surfacing. Manholes, valve boxes, drop inlets and other service entrances shall be protected from the slurry seal by a suitable method. The City Engineer shall approve the surface preparation prior to surfacing.

B. Pre-treat cracks in the pavement surface with an acceptable crack sealer prior to application of the slurry seal.

3.07 APPLICATION

A. When required by local conditions, the surface shall be pre-wetted by fogging ahead of the spreader box.

B. The slurry seal shall be of the desired consistency upon leaving the mixer. A sufficient amount of material shall be carried in all parts of the spreader at all times so that a complete coverage is obtained.

C. No streaks, such as those caused by oversized aggregate shall be left in the finished surface.

D. No excess buildup, uncovered areas, or unsightly appearance shall be permitted on longitudinal or transverse joints. The Contractor shall provide suitable width spreading equipment to produce a minimum number of longitudinal joints throughout the project. When possible, longitudinal joints shall be placed on lane lines. Half passes and odd width passes will be used only in minimum amounts. If half passes are used, they shall not be the last pass of any paved area. A maximum of six inches (6") shall be allowed for overlap of longitudinal lane line joints.

E. Areas which cannot be reached with slurry seal machines shall be surfaced using hand squeegees to provide complete and uniform coverage. The area to be hand worked shall be lightly dampened prior to mix placement and the slurry worked immediately. Care shall be exercised to leave no unsightly appearance from handwork. The same type finish as applied by the spreader box shall be required. Handwork shall be completed during machine applying process.

F. Care shall be taken to insure straight lines along curbs and shoulders. No runoff on these areas will be permitted. Lines at intersections will be kept straight to provide good appearance.

G. All areas, such as manways, gutters and intersections, shall have the slurry seal removed as specified by the City Engineer. The Contractor shall remove any debris associated with the performance of the work on a daily basis.

H. Rate of Application based on dry rock:

Application Rate	
Type I	8-12#/SY
Type II	12-20#/SY
Type III	18-30#/SY

I. The longitudinal joint between adjacent lanes shall have no visible lap, pinholes, or uncovered areas. Thick application caused by overlapping shall be smoothed immediately with hand squeegees before the slurry seal mixture breaks. When possible, longitudinal joints shall be placed on lane lines. The Contractor shall provide suitable spreading equipment to minimize the number of longitudinal joints. Overlays that occur at transverse joints shall be smoothed before the slurry seal mixture breaks, so that a uniform surface is obtained.

3.08 SAMPLING AND TESTING

A. Suitable sized samples of aggregate, asphalt emulsion, and mineral filler (if required) shall be submitted, when requested by the Project Manager, for approval not less than ten (10) days before the work starts. All samples of materials shall be supplied by the Contractor at his expense, and all tests necessary to determine conformance with requirements specified shall be performed without cost to the Contractor. Additional samples of materials shall be furnished as directed by the Project Manager during progress of the work. The owner will notify the Contractor immediately if any test fails to meet the specifications.

If it is established that a satisfactory slurry seal mixture meeting the requirements specified herein cannot be produced from the materials furnished, the materials shall be rejected and the Contractor shall submit new samples.

END OF SECTION

SECTION 02510

ASPHALT PAVING

PART 1 GENERAL

1.01 SECTION INCLUDES

A. This section covers the requirements for bituminous surface paving on roads.

PART 2 SUBMITTALS

2.01 SECTION INCLUDES

A. Contractor shall establish a mix gradation and the amount of bituminous material shall be submitted two (2) working days prior to surfacing for the approval by the City Engineer and shall meet the requirements of the gradation selected.

B. Test Reports: Submit test reports as requested by City Engineer verifying compliance with specified standards.

PART 3 EXECUTION

3.01 ALL STREETS SHALL BE SURFACED IN ACCORDANCE WITH THE FOLLOWING:

A. 6-inch minimum untreated base course over prepared and approved subgrade.

B. 3-inch minimum compacted thickness plant mix asphalt surfacing on all streets.

C. 2-lift minimum for plant mix asphalt surfacing when final compacted pavement thickness is greater than 3 inches.

3.02 BASE COURSE

A. Base for all streets shall consist of select material, as specified in Section 02206.

B. Base shall be laid in accordance with Section 02225.

C. Surfaces shall be true to the established grade with thickness being not less than 1/4 inch from the required layer thickness and with the surface elevation varying not more than 3/8 inch in ten feet from the true profile and cross section.

3.03 BITUMINOUS SURFACE COURSE

A. Base coarse shall be free of any contamination prior to laying surface coarse.

B. The surface course shall consist of a mixture of mineral aggregate and binder.

C. Gradation of aggregate shall conform to Section 02504.

D. Regardless of the bituminous content there shall be between 3% and 3.5% voids in the mix.

E. The bituminous material for surface course shall be PG58-28 asphalt cement conforming to the requirements of ASTM D-445. 85-100 penetration asphalt cement conforming to the requirements of AASHTO M20-60 may be used when specifically approved by the City Engineer.

F. The Contractor shall apply a tack coat to all existing asphalt or concrete edges and surfaces that will be in contact with the new bituminous surface course. Tack coat shall also be applied to the new asphalt along all transverse and longitudinal asphalt seems.

1. Tack coat shall be SS-1 or 1-H.

G. The bituminous surface course shall be mixed at a mixing plant and spread and compacted on the prepared base in conformance with the lines and dimensions shown on the plans and in accordance with these Specifications.

H. All existing asphalt shall be saw cut to remove fractures, cracked or damaged asphalt.

1. Asphalt shall be saw cut in straight lines.

3.04 CONSTRUCTION METHODS AND EQUIPMENT

A. All asphalt will be laid using a lay down machine unless written approval by City Engineer.

B. The methods employed in performing the work, all equipment, tools and machinery and other appliances used in handling the materials and executing the work shall be the responsibility of the Contractor.

C. The Contractor shall make such changes in the methods employed and in the equipment used as are necessary whenever the bituminous being produced does not meet the specification herein established.

3.05 SPREADING

A. The bituminous mixtures shall be spread with self-propelled mechanical spreading and conditioning equipment capable of distributing at least a 12-foot width.

B. The City Engineer shall determine whether or not the bituminous surface course shall be spread in one or more courses.

C. No surface course shall be placed less than 1 inch in thickness.

D. The mixture shall be spread and struck off in such a manner that the finished surface shall result in a uniform smooth surface.

E. The longitudinal joints in any succeeding courses shall be offset at least 6 inches transversely to avoid a vertical joint through more than one course.

F. The temperature of the bituminous mix shall be between 250° F and 325° F when placing.

3.06 COMPACTION

A. After the mixture has been spread, the surface shall be rolled in longitudinal direction commencing at the outside edge or lower side and preceding to the higher side.

B. Each pass of the roller shall overlap the preceding pass at least one-half the width of the roller.

C. Rolling shall continue until 95% of the laboratory density as determined in accordance with AASHTO Designation T-245 for the bituminous mixture being used has been obtained.

D. Rolling operations shall be conducted in such a manner that shoving or distortion will not develop beneath the roller.

E. Quality Control

1. A pre-paving meeting shall be held with contractor and engineer at least two days prior to paving commencement.

2. The surface of the pavement, after compaction, shall be uniform and true to the established crown and grade.

3. The Developer/Contractor shall be responsible to test bituminous mixtures for compaction in accordance with Section 01450, TESTING AND PROCESS CONTROL.

F. Smoothness

1. When tested with a ten (10) foot straight edge placed parallel to the center line of the pavement, the surface of the pavement at any point shall not deviate from the lower edge of the straight edge by more than one-quarter of an inch. If 10 foot straight edge fails pavement smoothness shall be determined using a certified profilograph or profiler. Perform preliminary profiling and roadway smoothness evaluation to identify any defects exceeding acceptance limits as described below.

2. For speeds between 0 to 29 mph, limit profile deviations to 0.4 Inches/25 feet max and PI (Profile Index) to 66 Inches/mile max. For speeds between 30 to 44 mph, limit profile deviations to 0.4 Inches/25 feet max and PI to 35 Inches/mile

max. Speeds greater than 45 mph limit profile deviations to 0.3 Inches/25 feet max and PI to 21 Inches/mile max. Use a zero blanking band for all speeds.

3. Profile Deviation: Begin traces 50 feet before edge of new pavement and end traces 50 feet after edge of new pavement. Areas exceeding profile deviation tolerance are "must grind" areas.

4. Lot is 0.1 miles (528 feet long one lane wide). Add segments shorter than 250 feet to preceding Lot. Treat partial segments longer than 250 feet as a Lot.

5. Exclude from the Lot are turn lanes, parking lanes, medians, crowns of intersecting streets, bridge decks, grades greater than 8 percent, and vertical curves less than 1,000 feet radius (including super-elevation transitions).

6. Mark all "must grind" areas on pavement to identify locations to be corrected.

7. Correct defects across the entire width of the traffic lane or shoulder either by grinding with a device approved by the Engineer or by surface replacement as approved by the Engineer.

8. Re-profile for correction verification before acceptance testing.

9. Seal areas that have been ground with a flush coat application

   i. Use CSS-1h, CSS-1, or equivalent emulsion, approximately 40 percent residual asphalt.

   ii. Apply the emulsion at 0.11 ± 0.01 gal/yd^2.

10. Notify the Engineer in writing after all corrective work has been performed and at least two working days before performing acceptance testing for pavement smoothness.

3.07 WEATHER LIMITATIONS

A. No bituminous surface shall be placed when the temperature of the air or road bed is 50° F or below, during rainy weather, when the base is wet or during other unfavorable weather conditions as determined by the City Engineer.

B. The air temperature shall be measured in the shade.

3.08 FLAGGING

A. Flaggers shall be required as directed to facilitate the safe control of traffic over highways and streets under construction at such locations as required and directed by the City Engineer.

B. Flagging shall be performed by certified, trained, and properly equipped flaggers.

C. All flagging shall be done as described in the Safety Orders covering flaggers of the Industrial Commission of Utah and in accordance with the MUTCD manual.

END OF SECTION

SECTION 02511

ASPHALT PAVEMENT CRACK SEALING

PART 1 GENERAL

1.01 SECTION INCLUDES

A. Furnish all labor, materials, and equipment as required to apply bituminous material to existing cracks in the pavement surface of the roads designated on the plans or as directed by the Engineer.

B. Removal of foreign material and loosened particles with compressed air or other approved method.

C. Provide traffic control, flagging, and temporary signing as required and in compliance with all project plans, City requirements, and Manual on Uniform Traffic Control Devices (MUTCD) standards and requirements.

1.02 RELATED WORK AND REFERENCES

A. ASTM D 113 - Ductility of Bituminous Materials

B. ASTM D 6690 – 07 Joint and Crack Sealants, Hot Applied for Concrete and Asphalt Pavements

C. AASHTO M324

D. ASTM D5329 – 09 Standard Test Methods for Sealants and Fillers, Hot Applied, for Joints and Cracks in Asphaltic and Portland Cement Concrete Pavements

PART 2 PRODUCTS

2.01 Material

A. Crack Seal Product shall be Maxwell Elastoflex 410 or approved equal.

B. Crack Sealing Compound shall be a homogeneous blend of materials combined to produce a material that meets ASTM D6690 and AASHTO M324 with the following properties.

1. Maximum Heating Temperature: The maximum heating temperature is the highest temperature to which the sealant can be heated, and still conform to all the requirements specified herein. For purposes of testing as specified herein, the application temperature shall be the same as the maximum heating temperature. The maximum heating temperature shall be set forth by the manufacturer, and shall be shown on the containers and shall be provided to the testing agency. The recommended heating and application temperature is 380° F to 400°F.

2. Cone Penetration: 90 maximum

3. Flow: 5mm max.

4. Softening Point: 176°F (80°C) minimum

5. Bond: Pass 5 cycles at 50% extension at -0°F(-17.8°C)

6. Flexibility Test: -20°F(-29°C)

7. Asphalt Compatibility: There shall be no failure in adhesion, or formation for an oily ooze at the interface between the sealant and the asphaltic concrete or softening or other harmful effects on the asphaltic concrete when tested at 140°F. The sealant shall be compatible.

8. Workability: Material shall pour readily over specified application temperatures and penetrate 1/4 inch crack for the entire ambient temperature range recommended by the manufacturer.

9. Curing: Product shall cure sufficiently within 30 minutes of application over the manufacturer's recommended ambient temperature range for application to allow normal traffic without tracking.

C. Mixing of different manufacturer's brands or different types of sealant is prohibited.

D. The contractor is to comply with state and local regulations to dispose of hazardous waste.

2.02 PRODUCT DELIVERY

A. The sealant shall be delivered in the manufacturer's original sealed container, legibly marked with the manufacturer's name, the trade name of the sealer, the manufacturer's batch or lot number, the application temperature range, the recommended application temperature and the safe heating temperature.

2.03 QUALITY ASSURANCE

A. The Contractor shall have an independent testing lab verify that the sealant material meets or exceeds ASTM D6690 Type I specifications. The independent lab shall be approved by Engineer.

B. Failure to meet the specification shall not be cause for claim or extension of the contract. The Contractor shall be liable for costs incurred in procuring and testing materials found to be out of specification.

C. Applicable Vendor certificates indicating that the material complies with this specification shall be required to accompany all shipments on this project.

PART 3 EXECUTION

3.01 PREPARATION

A. Remove foreign matter and loosened particles with compressed air.

1. A minimum of 100 psi is required.

B. Clean all cracks, including the joint between the curb and gutter and asphalt to a depth of two inches or to the bottom of the crack whichever is less.

C. Any cracks between curb and gutter and asphalt shall be cleaned and sealed. Any seams between driveways and the road shall be cleaned and sealed. Any seams between recent asphalt spot repair and existing asphalt shall be cleaned and sealed. Any cracks around manholes, valves, and/or manhole valve collars and survey monument collars shall be cleaned and sealed.

3.02 EQUIPMENT

A. Use circulating hot oil heat transfer for heating the product (sealant machines). Direct heat transfer units (tar pots) shall not be used. The product tank capacity of sealant placement equipment is not to exceed 500 gallons. Alternate equipment must be approved by the Engineer.

3.03 TEMPERATURE CONTROL

A. Observe sealant manufacturer's temperature application instructions. Contractor's sealant units shall have available at all times an operating ASTM 11-F thermometer with an intact mercury column or a certified, calibrated digital pyrometer, electronic thermometer, or equivalent direct reading temperature measurement device capable of reading within ± 50°F. From 200°F.-600°F.

B. Material overheated in excess of 30°F. Above the manufacturer's recommended maximum temperature for one hour or 60°F for one-half hour shall be wasted at the Contractor's expense. Do not place material if the temperature is below the manufacturer's recommended minimum application temperature.

C. The procedure for loading material into the sealant tank shall not depress the sealant temperature at the wand tip below the manufacturer's recommended minimum application temperature.

3.04 APPLICATION OF CRACK SEAL MATERIAL

A. Clean and seal across the full width of the bituminous surfacing including side slopes or as directed by the Engineer.

B. Seal cracks, when clean and dry and only upon inspection and approval by the Engineer.

C. The crack shall be overfilled and immediately squeegeed to form a band-aid. The band shall have the following configuration:

1. Band shall extend a maximum of one inch on either side of the crack(s).

2. Maximum width of band shall be four inches and centered on the crack.

3. Band shall have a maximum thickness of 1/16 inch. At least 90% of band placed shall have a thickness of 1/16 inch $\pm$ 1/64 inch.

D. Cracks in excess of one inch in width shall be filled with one-half minus plant mix or road mix or as directed by the Engineer.

E. Where traffic or construction activities may cause tracking or pullout of sealant material, the Contractor shall apply sand to the sealant as it is placed or utilize other approved method as approved by the Engineer.

F. Sealant material picked-up or pulled out shall be replaced at Contractor's expense. Any damage to the traveling public resulting from sealant application or sealant pullouts shall be paid for by the Contractor.

3.05 OPENING TO TRAFFIC

A. Allow treated areas to cure for a minimum of 30 minutes or until manufacturer's recommended set up time has elapsed.

END OF SECTION

SECTION 02512

RESTORATION OF SURFACE IMPROVEMENTS

PART 1 GENERAL

1.01 SECTION INCLUDES

A. Restoration of surface improvement requirements

1.02 GENERAL IMPROVEMENT REQUIREMENTS

A. The Contractor shall be responsible for the protection and the restoration or replacement of any improvements existing on public or private property at the start of work or placed there during the progress of work.

B. Existing improvements shall include but are not limited to permanent surfacing, curbs, ditches, driveways, culverts, fences and walls. All improvements shall be reconstructed to equal or better, in all respects, to the existing improvements removed.

PART 2 PRODUCTS

2.01 MATERIALS

A. Select Fill: In accordance with Section 02206.

B. Asphalt Concrete: In accordance with Section 02504.

C. Concrete: In accordance with Section 03304.

PART 3 EXECUTION

3.01 ROAD BASE REPAIR

A. Where trenches are excavated through gravel surfaced areas such as roads and driveways, etc., the gravel surface shall be restored and maintained as follows:

1. The gravel shall be placed deep enough to provide a minimum of 6-inches of material.

2. The gravel shall be placed in the trench at the time it is backfilled. The surface shall be maintained by blading, sprinkling, rolling, adding gravel, etc., to maintain a safe uniform surface satisfactory to the Engineer. Excess material shall be removed from the premises immediately.

3. Material for use on gravel surfaces shall be obtained from sound tough durable gravel or rock meeting the requirements of Section 02206.

3.02 BITUMINOUS SURFACE REPAIR

A. Where trenches are excavated through bituminous surfaced roads, driveways or parking areas, the surface shall be restored and maintained as follows:

1. Trenches shall be backfilled with untreated base course from the pipe bedding to match existing asphalt thickness with a minimum thickness of 3 inches.

2. Pavement restoration shall include priming of pavement edges with bituminous material and placing and rolling plant mix bituminous material to the level of the adjacent pavement surfaces.

3.03 CONCRETE REPAIR

A. All concrete curbs, gutter, sidewalks, and driveways shall be removed and replaced to the next joint or scoring lining beyond the actually damaged or broken sections.

B. In the event that joints or scoring lines do not exist or are three or more feet from the removed or damaged section, the damaged portions shall be saw cut, removed, and reconstructed to neat, plane faces.

C. All new concrete shall match, as nearly as possible, the appearance of adjacent concrete improvements.

D. Where necessary, lampblack or other pigments shall be added to the new concrete to obtain the desired results.

E. All concrete work shall conform to the requirements of Section 03310 of these Specifications.

END OF SECTION

SECTION 02528

CONCRETE STRUCTURES, DRIVEWAY, SIDEWALK, CURB AND GUTTER

PART 1 GENERAL

1.01 SECTION INCLUDES

A. Materials, installation and tolerances for Portland cement concrete ramps, sidewalk, curbs, gutters, and driveway approaches.

1.02 SUBMITTALS

A. Cut sheets: Curb and gutter cut sheets must be submitted to the City Engineer to be reviewed and approved. Allow 7 days for each review and approval.

B. Concrete mix design must be submitted 48 hours before placement and physical-chemical analysis of aggregates, in accordance with Section 03304.

C. Test reports: Submit test reports as requested by Engineer verifying compliance with specified standards.

PART 2 PRODUCTS

2.01 BACKFILL MATERIALS

A. Common fill, in accordance with Section 02205.

B. Select fill, in accordance with Section 02206.

2.02 MATERIALS: Materials used in Portland cement concrete and reinforcing of Portland cement concrete shall meet the following requirements:

A. In accordance with Section 03304.

B. Reinforcing Steel: All bar material used for reinforcement of concrete shall be intermediate grade steel conforming to the requirements of ASTM Designation A-15 and shall be deformed in accordance with ASTM Designation A-305.

C. Welded Wire Fabric: Welded wire fabric for concrete reinforcement shall conform to the requirements of AASHTO M-55.

2.03 FORMS

A. Forms shall be substantially built and adequately braced so as to withstand the liquid weight of concrete. All linings, studding, walling and bracing shall be such as to prevent

bulging, spreading, or loss of true alignment while pouring and displacement of concrete while setting.

B. Metal forms shall be used for curb and gutter work except at curves and on winding roads, unless continuous lay down machine is used, or as directed by city engineer.

C. Continuous curb lay down machine shall be used on all winding roads over 100 feet long, unless otherwise approved by City Engineer.

D. All edge forms for sidewalk pavements, curbs and gutters shall be of sufficient rigidity and adequately braced to accurately maintain line and grade.

E. Forms for curved sections shall be so constructed and placed that the finish surface of walls and edge of sidewalks, curbs and gutters will not deviated appreciably from the arc of the curve.

F. Exposed vertical and horizontal edges of the concrete in structures shall be chamfered by the placing of moldings in the forms.

2.04 PORTLAND CEMENT CONCRETE

A. In accordance with Section 03304.

PART 3 EXECUTION

3.01 EXAMINATION

A. Examine surfaces scheduled to receive concrete form work for defects that will adversely affect the execution of the work and deviations beyond allowable tolerances for installation of concrete material.

B. Do not start work until unsatisfactory conditions are corrected.

3.02 PREPARATION

A. A minimum slope of 0.5 % shall be maintained on all concrete used for drainage purposes unless discussed with and approved by the City Engineer.

B. Joining to Existing Concrete: Cut existing concrete to provide a straight line. Make all cuts at score lines or expansion joints. If existing adjacent concrete slabs not scheduled for replacement are damaged by Contractor's operation, replace concrete at no additional cost to City. When connecting to existing curb and gutter or waterways, the existing concrete shall be drilled and dowels inserted to make the connection.

C. Subgrade: A soils classification, as determined by AASHTO T-27 shall be made on the proposed subgrade and the following preparation schedule shall be followed based on that classification:

Sidewalk, Curb and Gutter, and Driveway Subgrade Preparation Schedule

Soil Classification	Requirement
A-1	The subgrade shall be moistened and compacted to the equivalent of 95% of maximum dry density as measured by AASHTO T-180 and in accordance with Section 02250.
A-2, A-3, A-4, or A-5	The subgrade shall be over-excavated a minimum of 12 inches and replaced with A-1-a import / granular material, and be moistened and compacted as above.
A-6 or A-7	The subgrade shall be over-excavated a minimum of 18 inches and replaced with A-1-a import / granular material, and be moistened and compacted as above.

1. No organic material, soft clay, spongy material, or other deleterious material will be permitted in the scarified or imported subgrade layer.

2. Rough subgrades shall be shaped and graded at least 6 inches beyond the back of the sidewalk to within a tolerance of 0.10 feet of design grade and drainage shall be maintained at all times.

D. Compaction: As indicated, in accordance with Section 02250.

E. Select Backfill: Unless indicated otherwise, provide 6" minimum of select fill below curbs, gutter, driveway approaches, alley intersections, and sidewalks.

F. Reinforcement and Embedded Items:

1. Reinforcing steel shall be clean and free from rust, scale, paint, grease, or other foreign matter which might impair the bond. It shall be accurately bent and shall be tied to prevent displacement when concrete is poured. Reinforcing steel shall be held in place by only metal or concrete ties, braces and supports. No steel shall extend from or be visible on any finished surface.

2. The Contractor shall use concrete chairs for holding the steel away from the subgrade and spreader or other type bars for securing the steel in place. The spreader bars shall be not less than 3/8 inch in diameter.

G. Site Preparation

1. Before batching and placing concrete, all equipment for mixing and transporting the concrete shall be cleaned.

2. All debris and ice shall be removed from the places occupied by the concrete.

3. Forms shall be thoroughly wetted (except in freezing weather), or oiled.

4. Masonry filler units that will be in contact with concrete shall be well drenched (except in freezing weather).

5. Reinforcement shall be thoroughly cleaned of ice or other coatings.

6. Water shall be removed from spaces to receive concrete.

3.03 CONCRETE PLACEMENT

A. Place in accordance with Section 03310.

B. No concrete shall be placed until the surfaces have been inspected and approved by the City Engineer or Inspector.

C. When placing concrete on earth surfaces, the surfaces shall be free from frost, ice, mud, and water.

D. When the subgrade surface is dry soil or pervious material, it shall be sprayed with water immediately before placing of concrete or shall be covered with waterproof sheathing paper or a plastic membrane.

E. Concrete shall be deposited as nearly as practical in its final position to avoid segregation due to rehandling or flowing.

F. The concrete placing shall be carried on at such a rate that the concrete is at all times plastic and flows readily into the corners of forms and reinforcing bars.

G. No concrete that is partially hardened or been contaminated by foreign material shall be deposited in the work, nor shall retempered concrete be used.

H. All concrete in structures shall be vibrator compacted during the operation of placing and shall be thoroughly worked around reinforcement and embedded fixtures and into the corners of forms.

I. Placing concrete in cold weather:

1. No concrete shall be placed where the air temperature is lower than 40 degrees Fahrenheit, at a location where the concrete cannot be covered or protected from the surrounding air.

2. When concrete is placed below a temperature of 35 degrees Fahrenheit the ingredients of the concrete shall be heated so that the temperature of the mixture shall not be less than 50 degrees or more than 100 degrees Fahrenheit.

3. Before mixing, the heated aggregates shall not exceed 175 degrees Fahrenheit.

4. Cement shall not be added while the temperature of the mixed aggregates and water is greater than 100 degrees Fahrenheit.

5. When there is likelihood of freezing during the curing period, the concrete shall be protected by means of an insulated covering to prevent freezing of the concrete for a period of not less than 7 days after placing.

6. Equipment for protecting concrete from freezing shall be available at the job site prior to placing concrete. Particular care shall be exercised to protect edges and exposed corners from freezing.

7. In the event heating is employed, care shall be taken to insure that no part of the concrete becomes dried out or is heated to temperatures above 100 degrees Fahrenheit.

8. The housing, covering, or other protection used shall remain in place and intact at least 24 hours after the artificial heating is discontinued.

9. For a period of five days the concrete shall be kept above 40 degrees F and below 100 degrees F.

3.04 CONCRETE MIXING

A. Concrete mix design must be submitted 48 hours before placement.

B. The concrete shall be mixed until there is a uniform distribution of the materials.

C. Sufficient water shall be used in mixing concrete to produce a mixture which will flatten and quake when deposited in place, but not enough to cause it to flow or exceed the water - cement ratio.

D. In no case shall the quantity of water used be sufficient to cause the collection of a surplus in the forms.

E. Ready-mixed concrete shall be mixed and delivered in accordance with the requirements set forth in Tentative Specifications for Ready-Mixed Concrete (AASHTO M-157).

F. Concrete shall be delivered and deposited in its final position within 90 minutes after adding the cement and water to the mixture.

G. Washing out of mixer trucks shall not be permitted within City rights-of-way.

3.05 CONTRACTION JOINTS

A. Sidewalks shall have contraction joints with the following requirements:

1. 5 foot intervals.

2. Approximately 3/16 inch wide.

3. Approximately one-half of slab thickness.

B. Curb and Gutter shall have contraction joints with the following requirements:

1. 10 foot intervals.

2. Approximately 3/16 inch wide.

3. Approximately one-half of slab thickness.

3.06 EXPANSION JOINTS

A. One-half (½) inch expansion joints shall be provided at 100 foot intervals in addition to locations where sidewalks and curbs adjoin existing sidewalks, curbs, or driveways.

B. Material for one-half (½) inch expansion joints shall be as defined in AASHTO M-33.

C. Expansion joints shall be installed with the top approximately one-quarter (1/4) inch below the concrete surface and extend to the bottom of the concrete.

3.07 SEALING OF EXPANSION AND CONTRACTION JOINTS

A. The sealant shall be one of the following:

1. Polysulfide polymer by Thiokol Chemical Corporation.

2. Sonolastic one-part sealant by Sonneborn-Contech Corporation.

3. Or approved equal.

B. As an alternative to the above sealant a continuous film of 4 mil thickness water-proof plastic may be placed under all concrete sidewalks, curbs and gutters on the low sides of streets.

C. Other erosion prevention measures may be used as an alternate if the developer first obtains written approval from the City Engineer concerning the types of material and procedure of installation.

3.08 FINISHING

A. Refer to Section 03345 for finishing requirements.

B. Slabs

1. The concrete shall be brought to established grade and screened, and then worked with a magnesium float.

2. The concrete shall be given a light broom finish.

3. Dry cement or a mixture of dry cement and sand should in no case be sprinkled on the surface to absorb moisture or hasten hardening.

4. Surface edges of all slabs shall be rounded to a radius of one-half (½) inch.

C. Curb and Gutter

1. Curb and gutter shall be slipped with a continuous curb machine where possible.

2. Where concrete must be poured in curb and gutter forms it shall be tamped and spaded so as to insure a thorough mixture, eliminate air pockets, and create uniform and smooth sides.

3. While the concrete is still green and not thoroughly set, the forms shall be removed and the front and top sides shall be finished with a float or steel trowel to make a uniform finished surface.

4. The top and face of the curb and also the top of the apron on combined curb and gutter must be finished true to line and grade and without any irregularities of surface noticeable to the eye.

5. The gutter shall not hold water to a depth of more than one-fourth (1/4) of an inch nor shall any portion of the surface or face of the curb or gutter depart more than one-fourth (1/4) of an inch from a straight edge ten (10) feet in length, placed on the curb parallel to the centerline of the street nor shall any part of the exposed surface present a wavy appearance.

D. Sidewalk

1. The sidewalk shall not hold water to a depth of more than one-fourth (1/4) of an inch nor shall any portion of the surface or face depart more than one-fourth (1/4) of an inch from a straight edge ten (10) feet in length, placed on the side walk parallel to the centerline of the street nor shall any part of the exposed surface present a wavy appearance.

3.09 CURING

A. Apply curing compound in accordance with Section 03310 unless water cure is indicated. Water cure is required if concrete surface sealing compound is to be applied.

B. A chemical curing agent may be used, provided it is applied in accordance with the manufacturer's specifications.

C. As soon as the concrete has hardened sufficiently to prevent damage, the finished surface shall be sprinkled with water and kept wet for at least three (3) days.

3.10 PROTECTION AND REPAIRS

A. The concrete surface must not be damaged or pitted by rain.

B. The Contractor shall provide and use, when necessary, sufficient tarpaulins to completely cover all sections that have been placed within the preceding twelve (12) hours.

C. The Contractor shall erect and maintain suitable barriers to protect the finished surface.

D. Any section damaged from traffic or other causes occurring prior to its official final acceptance shall be repaired or replaced by the Contractor at his own expense in a manner satisfactory to the City Engineer.

END OF SECTION

SECTION 02550

TRAILS

PART 1 GENERAL

1.01 SECTION INCLUDES

A. Trail construction requirements.

1.02 REFERENCES

A. AASHTO T-27: Standard Method for Sieve Analysis of Fine and Coarse Aggregate.

B. As per Section 02504

C. As per Section 02510

D. Midway City Trail System Master Plan

E. Midway City Trails Committee

F. AASHTO Guide for Development of Bicycle Facilities

1.03 DEFINITIONS

A. Trail Classifications:

1. Six foot Improved surface

2. Six foot Hard Surface

3. Eight foot Hard Surface

B. Hard Surface: A surface which has been constructed of either Asphalt or Concrete.

1.04 SUBMITTALS

A. As per Section 02504

B. As per Section 02510

PART 2 PRODUCTS

2.01 PAVING ASPHALT

A. Shall be ½-inch mix design

2.02 AGGREGATES - MATERIALS

A. Shall be 3/4-inch Untreated Base Course

B. Sub-grade shall be stable during a Test Roll as determined in Section 01450 2.05. Otherwise, the native material shall be excavated and import material installed as per Section 02225.

2.03 BRIDGES

A. Bridges shall be designed to adequately allow the passing of a 100-year flood, the bridges should also require minimal maintenance and accommodate the typical maintenance equipment.

2.04 ADA COMPLIANT

A. Trail design should be ADA compliant where possible with a slope of less-than or equal to 5 percent. When the slope of the trail is above 5 percent all other requirements of an ADA trail should still be followed. Grades should follow the requirements of the following table. For all other design criteria (stopping distances, curve radii, intersections, etc.) refer to the AASHTO Guide for Development of Bicycle Facilities.

Grade	**Limit on length at that Grade**
<5%	None
5-6%	800-foot
6-7%	400-foot
7-8%	200-foot
8-9%	100-foot
9-10%	50-foot
>10%	0

PART 3 EXECUTION

3.01 INSTALLATION

A. As per Section 02504

B. As per Section 02510

C. As per the current adopted Trail System Master Plan.

END OF SECTION

SECTION 02607

MANHOLES AND COVERS

PART 1 GENERAL

1.01 SECTION INCLUDES

A. Modular precast concrete manhole sections with tongue-and-groove joints covers, anchorage, and accessories.

1.02 RELATED SECTIONS

1.03 REFERENCES

A. AASHTO M-105: Gray Iron Castings.

B. AASHTO M-199: Precast Reinforced Concrete Manhole Sections.

C. ASTM C-923: Resilient Connectors Between Reinforced Concrete Manhole Structures and Pipes.

1.04 SUBMITTALS FOR REVIEW

A. Shop Drawings: Indicate manhole locations, elevations, piping, and sizes and elevations of penetrations.

B. Product Data: Provide manhole covers, component construction, features, configuration, and dimensions.

1.05 QUALIFICATIONS

A. Manufacturer: Company specializing in manufacturing products specified in this section with minimum three years documented experience.

1.06 GENERAL REQUIREMENTS

A. The Contractor shall furnish and install watertight cast-in-place or precast concrete manholes at the locations shown on the Drawings approved by the City Engineer.

B. Manholes shall be furnished complete with cast iron rings and covers.

C. Manhole spacing shall not exceed 400 lineal feet.

D. Manholes shall be installed at the end of each line exceeding 150 feet in length.

E. Cleanouts shall not be substituted for manholes nor installed at the end of lines greater than 150 feet in length.

F. Cleanouts on sewer laterals shall be placed every 100 feet and at all bends.

G. Flow Channels

1. The flow channel through manholes shall conform to the sewer pipe.

2. The depth of flow channels should be up to one-half to three-quarters of the diameter of the sewer pipe.

PART 2 PRODUCTS

2.01 MATERIALS

A. Manufacturers:

1. Amcor Model

2. Geneva Pipe Model

3. W.R. White Model

4. Materials and Equipment: Product options and substitutions. Substitutions: Permitted.

B. Manhole Sections: Reinforced precast concrete in accordance with AASHTO M-199 with gaskets in accordance with ASTM C-923.

C. Mortar and Grout: Type S.

2.02 COMPONENTS

A. Wall and Cone Sections

1. Manhole walls shall be constructed of 48" I.D. precast sectional, reinforced concrete pipe.

2. For pipelines of 18" diameter or larger, the manholes shall be 60" minimum I.D. Both cylindrical and taper sections shall conform to all requirements of AASHTO Designation M-170 for Reinforced Concrete Culvert Pipe with the following exceptions:

a. The throat section of the manhole shall be adjustable by use of pipe sections up to 18 inches in height.

b. The taper section shall be a maximum of 3 feet in height, shall be of eccentric conical design, and shall taper uniformly from 48 inches to 30 inches inside diameter.

c. The 48-inch inside diameter pipe used in the base section shall be

furnished in section lengths of 1, 2, 3 and 4 feet as required.

d. Reinforcing steel shall consist of a circular cage with a minimum cross sectional area of three-tenths (0.3) of a square inch of steel per foot in both directions.

e. 18" space maximum between cone and lid.

3. All joint surfaces of precast sections and the face of the manhole base shall be thoroughly cleaned and wet prior to setting precast sections.

4. All joints including grade rings shall be sealed with butyl rubber gasket that is permanently flexible and non-shrinking, similar to Brandt No. 95 Cold Weather Vault Sealant.

B. Manhole Steps

1. 12" Copolymer Polypropylene Plastic Steps

2. Reinforcement: ½" grade 60 steel reinforcement.

3. Steps must meet requirements outlined in ASTM 2146-68 under Type II, Grade 16906 and AASHTO M-31.

C. Concrete Base Pad

1. Except as noted below, manhole bases shall be pre-cast concrete conforming to the requirements of Section 03310 of these Specifications.

2. Where sewer lines pass through or enter manholes the invert channels shall be smooth and semi-circular in cross section.

3. Changes of direction of flow within the manholes shall be made with a smooth curve with as long a radius as possible and a minimum of 0.2 feet of fall.

4. The floor of the manhole outside the flow channels shall be smooth and slope toward the channel at not less than ½ inch per foot.

5. For high ground water areas, precast manholes and bases shall be required.

D. Lid and Frame

1. All iron castings shall conform to the requirements of AASHTO M-105 for grey iron castings.

2. Rings and covers shall have machined bearing surfaces and a minimum cover weight of 150 pounds and minimum ring weight of 233 pounds.

3. The foundry name, year of manufacture, and “SEWER”, “STORM DRAIN”, or “IRRIGATION” shall be marked on the cover.

4. All manhole rings shall be carefully set to the grade shown on the approved drawings or as directed by the City Engineer.

5. The manhole covers shall be so installed to be within 1/4" from the asphalt surface.

6. A concrete ring 18" wide and 8" thick will be poured around lid in accordance with Section 03304.

7. All manhole lids should be vented unless directed otherwise by the city engineer.

PART 3 EXECUTION

3.01 EXAMINATION

A. Verify items provided by other sections of Work are properly sized and located.

B. Verify that built-in items are in proper location and ready for roughing into Work.

C. Verify excavation for manholes is correct.

3.02 PREPARATION

A. Coordinate placement of inlet and outlet pipe or duct sleeves required by other sections.

3.03 PLACING MANHOLE SECTIONS

A. Place base pad, with top surface level.

B. Place manhole sections plumb and level, trim to correct elevations, anchor to base pad.

C. Cut and fit for pipe as required.

D. Grout vase of shaft sections to achieve slope to exit piping. Trowel smooth. Contour as required.

E. Set cover frames and covers level without tipping, to correct elevations.

3.04 DROP TYPE MANHOLES

A. A drop pipe should be provided for a sewer entering a manhole at an elevation of 24 inches or more above the manhole invert.

B. Where the difference in elevation between the incoming sewer and manhole invert is less than 24 inches, the invert shall be filleted to prevent solids deposition.

C. Drop manholes should be constructed with an outside wye drop connection. If an inside drop connection is necessary, it shall be secured to the interior wall of the manhole and provide access for cleaning.

D. Due to the unequal earth pressures that would result from the backfilling operation in the vicinity of the manhole, the entire outside drop connection shall be encased in concrete.

3.05 SCHEDULES

A. Storm Sewer Manholes: Precast concrete sections, copolymer polypropylene plastic steps, 48 inch inside dimension, to depth indicated, with bolted lid.

END OF SECTION

SECTION 02609

GREASE AND SAND INTERCEPTOR

PART 1 GENERAL

1.01 SECTION INCLUDES

A. Modular precast concrete grease interceptor sections with joint covers, access holes, anchorage, cast iron ring, grate, and accessories.

B. Modular precast concrete sand interceptor sections with joint covers, access holes anchorage, cast iron ring, grate, and accessories.

1.02 RELATED SECTIONS

1.03 REFERENCES

A. AASHTO M-105: Gray Iron Castings.

B. AASHTO M-199: Precast Reinforced Concrete.

C. ASTM C-923: Resilient Connectors Between Reinforced Concrete Structures and Pipes.

1.04 SUBMITTALS FOR REVIEW

A. Product Data: Provide ring & covers, component construction, features, configuration, and dimensions.

1.05 QUALIFICATIONS

A. Manufacturer: Company specializing in manufacturing products specified in this section with minimum three years documented experience.

1.06 GENERAL REQUIREMENTS

A. The Contractor shall furnish and install watertight cast-in-place or precast concrete grease interceptors and sand interceptors as required by the City Engineer or City Officials.

B. Grease interceptors and sand interceptors shall be furnished complete with cast iron rings and covers.

C. Design of grease and sand interceptors shall be approved by City Engineer.

D. Flow Channels

1. The flow channel through Grease interceptors shall conform with the slope of the sewer.

2. Adjacent floor area should drain to the channel with the minimum slope of 1 inch per foot.

PART 2 PRODUCTS

2.01 MATERIALS

A. Manufacturers:

1. Amcor

2. Geneva Pipe

3. Dura-crete

4. Or approved equal.

B. Grease interceptor Sections and sand interceptor: Reinforced precast concrete in accordance with AASHTO M-199 with gaskets in accordance with ASTM C923.

C. Mortar and Grout: Type S.

2.02 COMPONENTS

A. Wall Sections to be designed to meet ASTM C858 with AASHTO HS-20 loading.

1. Interceptors shall be constructed of 6" thick precast reinforced concrete. Box size to be 3-foot by 3-foot and the height as shown on plans. Provide grade rings as needed.

2. Grease interceptor shall be designed to meet ASTM C-875 “minimum structural design loading for underground precast concrete utility structures. Box size and capacity to be designed by others and approved by City Engineer. Provide grade rings as needed.

3. All joint surfaces of precast sections and the face of the walls, base, and grade rings shall be thoroughly cleaned and wet prior to setting precast sections.

4. All joints including grade rings shall be set in mortar consisting of 1 part cement and 1 ½ parts sand with sufficient water added to bring the mixture to workable consistency, or the joints shall be sealed with butyl rubber gasket that is permanently flexible and non-shrinking, similar to Brandt No. 95 Cold Weather Vault Sealant.

B. Lid and Frame

1. All iron castings shall conform to the requirements of H-20 loading for grey iron castings.

2. Rings and grates shall have machined bearing surfaces and a minimum cover weight of 150 pounds and minimum ring weight of 233 pounds.

3. Type of utility shall be marked on the cover.

4. All Grease interceptor and clean-out box rings shall be carefully set to the grade as shown on the approved drawings or as directed by the Engineer.

5. Grate covers shall be so installed to be within 1/4" from the finished surface.

6. A concrete collar poured around lid in accordance with Standard Specifications and Drawings as shown here in.

2.03 CONFIGURATION

A. Shape: rectangular

B. Design Size: design criteria to be submitted to the City Engineer for review.

C. Clear Great and Lid Opening: 24 inches diameter.

D. Pipe Inlet and Outlet: Pipe inlet and outlet to be grouted to eliminate infiltration and leakage.

PART 3 EXECUTION

3.01 PLACING CONCRETE SECTIONS

A. Place base pad, trowel top surface level.

B. Place Grease interceptor and sand interceptor plumb and level, trim to correct elevations, anchor to base pad.

C. Cut and fit for pipe as required.

D. Grout base of shaft sections to achieve slope to exit piping.

E. Provide grade rings and needed Trowel smooth. Contour as required.

F. Set cover frames and covers level without tipping, to correct elevations.

3.02 SCHEDULES

A. Grease interceptors and sand interceptors: Precast concrete sections, copolymer polypropylene plastic steps, to depth indicated, with tamper proof lid.

END OF SECTION

SECTION 02660

PIPELINE TESTING

PART 1 GENERAL

1.01 SECTION INCLUDES

A. Testing requirements for potable and non-potable water piping systems and sanitary sewers.

1.02 REFERENCES

A. Rule R309-550-8(7): Pressure and Leakage Testing

B. AWWA Standard C600-10: Installation of Ductile-Iron Mains and Their Appurtenances

1.03 DEFINITIONS

A. Leakage: The quantity of water required to maintain the specified hydrostatic test pressure after the pipeline has been filled with water and the air expelled.

B. Non-rigid Pipe: Any pipe which required bedding and backfill material for structural support.

1.04 SUBMITTALS

A. Pipeline Test Report: Include the following items:

1. Type of test.
2. Identification of pipe system.
3. Size, type, location and length of pipe in test section.
4. Test pressure and time.
5. Amount of leakage versus allowable.
6. Date of test approval.
7. Signature of test supervisor.
8. Signature of the City Engineer, Inspector, or City Water Superintendent witnessing and approving the test.
9. One copy of video tape.

1.05 PROJECT CONDITIONS

A. After construction of sanitary sewer lines, they shall be thoroughly cleaned and test for leakage and alignment in the presence of the City Engineer or the City Inspector before acceptance by the City.

B. Repair pipeline system at no additional cost to City until it passes subsequent retesting.

C. Recording Equipment:

1. Supply all necessary equipment to perform pressure testing.

2. Secure City's approval of pressure gages.

3. Locate all gages and recording equipment away from affect of sunshine or other weather conditions.

4. Place, vents, pressure taps and drains for the test. Repair pipeline at the completion of the test at no cost to City.

PART 2 PRODUCTS

2.01 TESTING MATERIALS

A. Medium: Water or air, as required by test.

B. Equipment: Temporary motors, pumps, pumping apparatus, pressure gages, connections, power, etc. for making the tests.

PART 3 EXECUTION

3.01 PREPARATION

A. Notify City Engineer or City Water Superintendent 48 hours in advance of test.

B. Carry out tests as pipeline construction progresses to ensure construction methods are producing satisfactory results.

3.02 TESTING FOR PRESSURE PIPELINES

A. Expel all air from the pipeline before applying the specified test pressure. Provide air release taps at points of highest elevations before testing. Insert permanent plugs after test has been completed.

B. Test pressure and duration: A minimum pressure 50 psi in excess of the designated class rating of the pipe being tested shall be maintained on the portion being tested for a minimum period of two hours, using hydraulic means to maintain the pressure. The test pressure shall not vary by more than 5 psi (plus or minus) for the duration of the test. If

necessary, the test pressure shall be maintained by additional pumping during the 2 hour test duration.

C. The testing allowance: The testing allowance shall be defined as the quantity of water that must be supplied to the pipe section being tested to maintain a pressure within 5 psi of the specified hydrostatic test pressure. The quantity of water shall be accurately measured in gallons by suitable methods. No installation will be accepted if the quantity of makeup water is greater than that determined by the formula:

$$Q = \frac{LD\sqrt{P}}{148{,}000}$$

Where:
Q = quantity of makeup water in gallons per hour
L = length of pipe section being tested, in feet
D = nominal diameter of pipe, in inches
P = average test pressure during the hydrostatic test, in pounds per square inch (gauge)

D. Suitable means shall be provided by the Contractor for determining water lost by leakage under the test pressure.

E. Locate and repair the defective joints and retest until the leakage is within the specified allowance.

F. Repair any noticeable leakage even if total leakage is less than allowable.

G. Flushing:

1. After pressure testing all pipelines shall be flushed.

2. Flushing shall be accomplished through hydrants or, if a hydrant does not exist at the end of the line, the Contractor shall install a tap of sufficient size to provide for a 2.5 foot per second flushing velocity in the line.

3. The following is the flow quantity required to provide a 2.5 foot per second flushing velocity:

Pipe Size (In.)	Flow (gpm)
4	100
6	220
8	390
10	610
12	880
16	1,567

3.03 ALIGNMENT AND GRADE TEST

A. No variance will be allowed from line and grade in excess of 1/32" per inch of pipe diameter or ½" maximum provided that such variation shall not result in a level or reverse sloping invert.

B. The variation in the invert elevation between adjoining ends of pipe due to eccentricity of joining surface and pipe interior surfaces shall not exceed 1/64" per inch of pipe diameter, or ½" maximum.

3.04 OBSTRUCTION TEST

A. Visually examine pipe internally for obstructions by use high power light or mirror.

B. When required by the City Engineer, a round incompressible mandrel which is 1" less in diameter than the internal diameter of the pipeline and 2 times the diameter in length will be passed through the pipeline.

3.05 NON-RIGID PIPE DEFLECTION TEST

A. Test installed sections of non-rigid pipeline to ensure that circumferential deflection of non-rigid pipe does not exceed 5 percent. Use mandrel of proper size.

3.06 INFILTRATION TEST

A. No pipe section will be accepted if the infiltration rate exceeds 100 gallons per inch diameter per mile per 24 hours.

3.07 FLUSHING OF SANITARY SEWERS

A. All sanitary sewer lines shall be flushed and cleared prior to acceptance by the City.

B. Flushing

1. Laterals and trunk lines shall be flushed by water to remove all foreign material.

2. Wastewater and debris shall not be permitted to enter sewer lines in service, but shall be removed at the lowest manhole of the extension.

3. Other methods of cleaning may be used upon approval of the City Engineer.

4. After the lines have been thoroughly cleaned, they shall be tested between all manholes for displacement.

3.08 PIPE TESTING SCHEDULE

A. Irrigation:

1. Alignment and grade test.

2. Pressure test.

3. Operational Testing:

   a. Perform operational testing after hydrostatic test is complete, backfill is in place and sprinkler heads adjusted to final position.

   b. Demonstrate system meets coverage requirements and automatic controls function properly.

   c. Coverage requirements are based on operation of 1 circuit at a time.

B. Sub-drains:
   1. Alignment and grade test.
   2. Obstruction test.
   3. Non-rigid pipe deflection test.
   4. Pressure test for pressure pipeline systems.

C. Storm Drains:
   1. Alignment and grade test.
   2. Obstruction test.
   3. Non-rigid pipe deflection test.
   4. Pressure test for pressure pipeline systems.
   5. Video Test. All lines to be televised and videoed.
      a. Run water through gravity system prior to video inspection.
      b. Conduct test at least 30 days after backfill and prior to installation of pavements.

D. Potable Water System:
   1. Obstruction test.
   2. Bacteria test.
   3. Pressure Test
   4. If pressure test fails and line repaired, the bacteria test is again required.

END OF SECTION

SECTION 02668

WATER TRANSMISSION AND DISTRIBUTION SYSTEMS

PART 1 GENERAL

1.01 SECTION INCLUDES

A. Pipe and fittings for culinary water line.

B. Valves, fire hydrants and water meters.

1.02 RELATED SECTIONS

A. Section 02205: Common Fill.

B. Section 02206: Select Fill.

C. Section 02225: Excavating and Backfill Operations.

D. Section 02250: Soil Compaction.

E. Section 02660: Pipeline Testing.

F. Section 02675: Disinfection.

G. Section 03304: Portland Cement Concrete: Concrete for thrust restraints.

1.03 REFERENCES

A. ASME B16.18: Cast Copper Alloy Solder Joint Pressure Fittings.

B. ASME B16.22: Wrought Copper and Copper Alloy Solder Joint Pressure Fittings.

C. ASTM B88: Seamless Copper Water Tube.

D. ASTM D2241: Poly (Vinyl Chloride) (PVC) Plastic Pipe (SDR-PR).

E. ASTM D2774: Recommended Practice for Underground Installation of Thermoplastic Pressure Piping and PVC Pipe

F. ASTM D2855: Making Solvent-Cemented Joints with Poly (Vinyl Chloride) (PVC) Pipe and fittings.

G. AWWA C104-16: Cement-Mortar Lining for Ductile-Iron Pipe and Fittings.

H. AWWA C105-10: Polyethylene Encasement for Ductile Iron Piping Systems.

I. AWWA C110-12: Ductile-Iron and Gray-Iron Fittings.

J. AWWA C111-17: Rubber-Gasket Joints for Ductile Iron Pressure Pipe and Fittings.

K. AWWA C151-09: Ductile-Iron Pipe, Centrifugally Cast.

L. AWWA C500-09: Metal-Seated Gate Valves for Water Supply Service.

M. AWWA C502-14: Dry Barrel Fire Hydrants.

N. AWWA C504-15: Rubber Seated Butterfly Valves.

O. AWWA C600-10: Installation of Ductile-Iron Water Mains and Appurtenances.

P. AWWA C900-16: Polyvinyl Chloride (PVC) Pressure Pipe and Fabricated Fittings, 4 inch - 60 inch.

Q. UL 246: Hydrants for Fire - Protection Service.

R. R309-550-8(4) Dropping Pipe into Trench. Installation of water lines shall comply with this rule.

1.04 SUBMITTALS

A. Prior to construction submit 1 hard copy and electronic PDF copy of the manufactures specification for all products to the engineer for approval.

1.05 SUBMITTALS AT PROJECT CLOSEOUT

A. Record actual locations of piping mains, valves, connections, thrust restraints, and invert elevations.

B. Identify and describe unexpected variations to subsoil conditions or discovery of uncharted utilities.

1.06 SPECIAL REQUIREMENTS AND CONSIDERATIONS

A. To provide increased reliability of service and reduce head loss, dead ends shall be minimized by making appropriate tie-ins and “looping” of the water system whenever practical. Where dead-end mains do occur (permanent or temporary), a fire hydrant or approved blow-off assembly shall be installed for flushing purposes as directed by the City Engineer. Flushing devices must have the minimum sizes shown on Midway City Standard Drawing “Water-8”, but must also be sized to provide a minimum velocity of 2.5 fps in the water main.

B. Where distribution systems are installed in areas of contamination pipe and joint materials which are not susceptible to contamination, such as permeation by organic compounds, shall be used; and, non-permeable materials shall be used for all portions of the system including water mains, service connections, and hydrant leads per R309-550-5(10).

C. The standard horizontal distance between water lines and sanitary sewer lines shall be at least 10 feet. Where a water main and sewer line must cross, the water main shall be at least 18 inches above the sewer line. Separation distances shall be measured from pipe edge to pipe edge. Adherence to all separation requirements included in Sections R309-550-7 and R309-550-12 shall be required unless a written variance is requested and granted from the Utah Division of Drinking Water and Midway City.

PART 2 PRODUCTS

2.01 All materials which may contact drinking water, including pipes, gaskets, lubricants and O-Rings, shall be ANSI-certified as meeting the requirements of NSF Standard 61, Drinking Water System Components - Health Effects. To permit field-verification of this certification, all such components shall be appropriately stamped with the NSF logo.

2.02 DUCTILE IRON WATER PIPE

A. Ductile Iron Water pipe shall be Class 50 for slip-on joint piping (Class 51 for 4-inch size) and Class 53 for mechanical joint and flanged joint piping.

B. All piping shall conform to AWWA Specification C-151 of the latest revision.

C. Pipe joints shall be the push-on rubber gasket type of mechanical joint type with plain rubber gaskets conforming to AWWA C-111 of latest revision or flanged connections conforming to AWWA C-115 of latest revision.

D. All Ductile Iron Pipe wall thicknesses shall conform to AWWA C 150-76.

E. Fittings: Fittings shall conform to AWWA Specification C 110-77 and shall have mechanical or push-on rubber gasket joints.

F. Coatings and Linings for Ductile Iron Pipe

1. All exterior surfaces of pipe and fittings shall be coated with hot coal tar approximately 1 mil thick.

2. All interior surfaces of pipe and fittings shall be coated with the standard thickness cement mortar lining in conformity with the requirements of A.S.A. Standard A21.4.

G. Markings

1. Pipe markings shall include the following, marked continuously down the length:

a. Manufacturer’s Name

b. Nominal Size

c. Class Pressure Rating

d. PVC 1120

e. NSF Logo

f. Identification Code

g. Minimum water main size is 8 inches

2.03 POLYVINYL CHLORIDE PIPE (PVC)

A. All PVC pipe used for transmission lines shall be AWWA C-900, DR-18 or as determined by the City Engineer. All PVC pipe used for secondary irrigation lines shall be AWWA C-900, DR-18 Purple pipe or as determined by the City Engineer.

B. Conformance: All PVC pipe shall conform to the latest revisions of the following specifications.

1. AWWA Spec. C-900 (PVC pressure pipe for water)

2. ASTM Spec. D-2241 (PVC plastic pipe SDR-PR and Class T)

3. Commercial Standard CS256-63 (pressure rated pipe)

4. National Sanitation Foundation Testing Laboratories (NFS)

5. Rubber Gasketing shall conform to ASTM 1869.

C. Pipe Dimensions

1. Standard lengths shall be 20 feet.

2. Wall thickness shall be in accordance with CS256-63 and ASTM d-2241.

3. Pipe ends shall be beveled to accept the gasketed coupling (4" and larger).

4. Minimum water main size is 8 inches.

D. Couplings and Fittings

1. The coupling and fittings shall be furnished by the pipe manufacturer and shall accommodate the pipe for which they are to be used.

2. They shall have a minimum pressure rating of 200 psi.

3. Insertion depth of the pipe in the coupling shall be controlled by a gauge mark or mechanical stop in the coupling which will allow for a thermal expansion and contraction.

4. All pipe couplings and fittings are required to be new thrust restrained joint

fittings.

5. All bolt kits and packs shall be stainless steel.

E. Lubrication: Lubrication shall be water soluble, non-toxic, be non-objectionable in taste and odor imparted to the fluid, be non-supporting of bacteria growth, and have no deteriorating effect on the PVC or rubber gaskets.

F. Concrete Blocking

1. All fittings at bends and branches in water pipe lines shall be provided with concrete thrust blocking as shown on the Standard Drawings.

2. All bolts shall be greased and bends will be wrapped with 8 mil plastic.

3. Blocking shall be of concrete specified in Section 03304, poured in place and shall bear against solid undisturbed earth at the sides and bottom of the trench excavation and shall be shaped so as to not obstruct access to the joints of the pipe or fitting.

2.04 GATE VALVES

A. Gate valves should be used when application is 12" diameter or less.

B. Furnish gate valves that conform to the requirements of AWWA C-500, with ductile iron body, bronze mounted, double disc, parallel seat, non-rising stem design with “O” ring seals.

C. Operating Direction: Open counterclockwise.

D. Buried Valves: Unless otherwise shown or specified, valves shall be of Mechanical Joint connection design for buried service.

E. Buried Valves shall have 2" operation nuts.

2.05 BUTTERFLY VALVES

A. Butterfly valves shall be used for application greater than or equal to 14" in diameter or as approved by the City Engineer.

B. Material, in accordance with AWWA C-504.

C. Body Type

1. Valves shall be high strength cast iron ASTM A-126, Class B with 18-8 Type 304 stainless steel body seat.

2. Valve vane shall be mechanically secured with an integral 18-8 stainless steel clamp ring and 18-8 stainless steel nylon locked screws.

3. Both valve ends shall be mechanical joint per AWWA Specification C-111 and accessories (bolts, glands, and gaskets) shall be included.

4. All butterfly valves shall be of the rubber-seated tight-closing type. The rubber seat shall be a full circle 360° seat not penetrated by the valve shaft.

D. Valve Shafts

1. The valve shaft shall be one piece extending full size through the entire valve and operator with no neckdown, keyways, or holes to weaken it.

2. The valve shaft shall have 304 stainless steel journals rotating in reinforced Teflon bearings.

3. Valves shall have permanently set two-way thrust bearing.

4. Packing shall be "triple-seal" rubber designed for permanent duty in underground service.

2.06 VALVE BOXES

A. All buried valves shall be installed complete with a cast iron, 2 piece, 5 1/4 inch shaft valve box.

2.07 TAPPING SADDLES

A. For tapping saddles used for service connections provide all stainless steel service saddles with "IP" threads. For 4" – 12" diameter pipe use ROMAC 306 series or approved equal. For >12" diameter pipe use ROMAC 305 series or approved equal.

2.08 LATERAL SERVICE CONNECTIONS

A. Provide and install according to standard drawings

B. Service Pipe:

1. Provide single length (no splices) of PEP pipe (copper pipe size) with compression fittings.

2. Locate service taps in the upper quadrant of the main line, approximately at 45 degrees. The minimum distance between taps is 24", with a 5 degree stager. Do not make service taps within 24" of the end of the main line.

3. Service saddles are required on all taps unless indicated otherwise.

4. In subdivision developments, the contractor shall be responsible to furnish and install the corporation type stop and laterals to a point on private property 24 inches past the street right-of-way line.

C. Meter Boxes: Plastic or asphalt-dipped corrugated metal. Fiber meter boxes are not

acceptable. Provide a meter box with ring and cover of sufficient strength to withstand loadings in vehicular traffic areas without breaking.

D. Coppersetters or metersetters shall be manufactured by Ford series 70.

E. All materials to be supplied by the Contractor, except for the meter.

2.09 HYDRANT

A. In accordance with AWWA C502.

B. 6-inch cast iron hydrant as manufactured by Waterous.

C. Cast-Iron Body Fire Hydrant: Compression type, opening against pressure and closing with pressure, base valve design, 150 psi working pressure, with 1/4" diameter minimum tapping and bronze plug in standpipe.

1. Size: Minimum 5" valve opening

2. Direction to Open Hydrant: Left

3. Size and Shape of Operating and Cap Nuts: Pentagon 1-1/2" point to flat.

4. Hose Nozzles: Two 2-1/2" National Standard Thread, cap, gasket and chain.

5. Pumper Nozzles: One 4-1/2" National Standard Thread, cap, gasket and chain.

6. Depth of Cover: 5'-0" unless indicated otherwise.

7. Connection to Main: O-ring seals and a 6" ASA 125 pound flanged inlet.

8. Pressure: Designed for a working pressure of 175 psi and a hydrostatic pressure of 350 psi.

9. Bottom connection: 6" flanged. Designed to allow the flanges at the sidewalk level to separate when hydrant is sheared off.

10. Automatic drain: Opens as the hydrant is closed.

D. Mechanical joint or flanged in accordance with AWWA C110 and AWWA C111.

E. Hydrant spacing shall not exceed 500-feet. Hydrants shall also be installed at the end of every cul-de-sac.

2.10 AIR VAC RELEASE STATIONS

A. Air Releases shall be installed at all peaks and sharp changes in gradient as determined by the City. If the waterline has service connections within the location of the peak or change in the gradient, the air release station may be eliminated at the City Engineers

discretion.

B. The open end of the air relief vent pipe from automatic valves shall be provided with a #14 mesh, non-corrodible screen and a downward elbow, and where possible, be extended to at least one foot above grade. Alternatively, the open end of the pipe may be extended to as little as one foot above the top of the pipe if the valve's chamber is not subject to flooding, or if it meets the requirements of (7) Chamber Drainage.

C. Blow-offs or air relief valves shall not be connected directly to a sewer.

D. Adequate number of hydrants or blow-offs shall be provided to allow periodic flushing and cleaning of water lines.

E. The air relief valve shall be installed in a manner to prevent it from freezing. A shut-off valve shall be provided to permit servicing of an air relief valve.

2.11 All underground fire hydrant and valve assembly bolts shall be stainless steel. All flange and mechanical joint bolt kits to be stainless steel bolts installed using approved potable water grease, and wrapped with an approved poly wrap.

2.12 BACK FLOW PREVENTORS

A. All irrigation lines connected to culinary system shall have RP backflow devices with 3 chambers, and above ground air release with an air gap.

B. All backflow preventers shall be tested by a certified backflow technician, and a passing test report will need to be provided to the City.

2.13 PRESSURE REDUCING VALVES (PRV)

A. Pressure Reducing Valves shall be manufacturing by CLA-VAL or approved equal.

B. Operation: Capable of maintaining and adjustable constant downstream pressure regardless of the upstream pressure.

C. Type: Hydraulically operated using a direct-acting, spring-loaded, normally open, pilot valve controlled diaphragm:

1. Single removable seat and a resilient disc. No "O" ring type discs permitted. No external packing glands permitted. No pistons operating main valve or pilot controls permitted.

2. Y-strainers on pilot controls, variable closing and opening speed controls and a valve position indicator.

D. Rating: 250 psi working pressure.

E. Connection: Flanged

F. Pressure Gage: Upstream and downstream of valve capable of accurately measuring system pressures.

G. Isolation Valves shall be installed on both sides of the pressure reducing valve. Where variable flow conditions will be encountered, consideration shall be given to providing parallel PRV lines to accommodate low and high flow conditions.

2.14 CROSS-CONNECTION CONTROL

A. See Chapter 10.03 of the Midway City Municipal Code for Cross-Connection Control and comply with rule R309-550-9 Cross Connections and Interconnections.

PART 3 EXECUTION

3.01 PREPARATION

A. Cut pipe ends square, ream pipe and tube ends to full pipe diameter, remove burrs.

B. Remove scale and dirt on inside and outside before assembly.

C. Prepare pipe connections to equipment with flanges or unions.

3.02 BEDDING

A. Excavate pipe trench in accordance with Section 02225 for work of this Section. Hand trim excavation for accurate placement of pipe to elevations indicated.

B. Form and place concrete for pipe thrust restraints at any change of pipe direction. Place concrete to permit full access to pipe and pipe accessories. Provide thrust restraint bearing on subsoil according to standard drawings.

C. Place bedding material at trench bottom, fill materials in one continuous layer not exceeding 8 inches compacted depth; compact to 95 percent.

D. Backfill around sides and to top of pipe with cover fill, tamp in place and compact to 95 percent.

E. Maintain optimum moisture content of bedding material to attain required compaction density.

3.03 INSTALLATION - PIPE

A. The bottom of the trench shall be cut flat, true and even to provide uniform bearing for the full length of the pipe barrel.

B. Each pipe shall be laid true to line and grade and in such manner as to form a close concentric joint with adjoining pipe to prevent sudden offsets.

C. Pipe bedding and trench backfill shall be as defined in the previous sections.

D. As work progresses, interior of pipe shall be cleared of dirt and other superfluous materials.

E. Trenches shall be kept free from water until pipe jointing has been completed. Pipe shall not be laid when condition or trench or weather is unsuitable for such work.

F. At all times when work is not in progress, all open ends of pipe and fittings shall be securely closed so that no water, earth, or other substance will enter pipe or fittings.

G. Maintain separation of water main and services from sewer piping in accordance with Utah State Plumbing Code.

H. Install pipe to indicated elevation to within tolerance of 5/8 inches.

I. Install ductile iron piping and fittings to AWWA C600.

J. Route pipe in straight line.

K. Install pipe to allow for expansion and contraction without stressing pipe or joints.

L. Install access fittings to permit disinfection of water system performed under Section 02675.

M. Slope irrigation water pipe and position drains at low points.

N. Form and place concrete for thrust restraints at each elbow or change of direction of pipe main.

O. Establish elevations of buried culinary piping to ensure not less than 5 feet of cover.

P. Establish elevations of buried irrigation piping to ensure not less than 2 feet of cover.

Q. Install metallic tape continuous over top of pipe buried 12 inches above pipe line.

R. Backfill trench in accordance with Section 02225.

S. Handling Ductile Iron Pipe

1. Pipe and fittings shall be handled in such a manner as to insure installations in sound, undamaged condition.

2. Particular care shall be taken not to injure the pipe coating and lining. Cement lining in pipe or fittings which is broken or loosened shall be cause for rejection of the pipe or fittings.

3. All damaged pipe coating shall be repaired, prior to laying the pipe or placing the backfill.

4. Repair shall be accomplished by removing all damaged coating, wire-brushing to

exposed metal, and applying two coats of coal tar coating of a type and quality to that originally in coating the pipe.

T. Cutting, Cleaning and Inspection

1. Cutting of pipe for closure pieces or for other reasons shall be done in a neat and workmanlike manner by a method which will not damage the pipe.

2. Before installation, each pipe shall be inspected for defects.

3. All defective, damaged or unsound pipe shall be rejected.

U. Location of Stub Pipes

1. The location of each stub shall be marked by placing a 2 x 4 marker at the end of the pipe and extending vertically from the end of the pipe to approximately 15 inches above the ground surface.

2. The portion of the 2 x 4 extending above ground, shall be painted as follows:

a. Green - indicating sewer stub.

b. Blue - indicating water

3. The sidewalk and curb shall be stamped in the following manner, showing locations of water, sewer, and pressure irrigation stub pipes:

a. A “W” stamp for water.

b. A “S” stamp for sewer.

c. A “PI” stamp for pressure irrigation

V. Under no circumstances shall the pipe or accessories be dropped into the trench.

W. A water system shall not install an unpressurized transmission line less than 20 feet from a concentrated source of pollution (e.g., septic tanks and drain fields, garbage dumps, pit privies, sewer lines, feed lots, etc.). Furthermore, unpressurized transmission lines shall not be placed in boggy areas or areas subject to the ponding of water, see rule R309-550-12(2).

3.04 INSTALLATION - VALVES AND HYDRANTS

A. Set valves on solid bearing.

B. Locate valves on property lines, at each intersection, and not more than 500 feet between.

C. Center and plumb valve box over valve. Set box cover flush with finished grade with concrete collar as per standard drawings.

D. Set hydrants plumb; locate pumper nozzle perpendicular to and facing roadway.

E. Paint hydrants Red

F. Anchorages: Provide anchorages for tees, wyes, crosses, plugs, caps, bends, valves, and hydrants. After installation, apply full coat of asphalt or other acceptable corrosion-retarding material to surfaces of ferrous anchorages.

3.05 INSTALLATION - SERVICE CONNECTIONS

A. The contractor or home owner must provide and install all parts according to the standard drawings.

B. The Engineer or Public Works Department must inspect the installation before burying or backfilling. The Contractor shall conform to the following requirements before a water meter is installed by the City:

1. Notify the Water Department at least five working days prior to the time the meter is to be installed and before backfilling.

2. The water lateral should be exposed in the street right-of-way one foot outside the property line, even if the lateral extends onto the property.

3. The end of the house lateral should be within 2 feet of the service lateral.

4. Both laterals should be exposed freely in the center of the excavation.

5. To prevent damage from possible freezing, the water lateral may be covered with materials such as sand, light gravel, straw, insulation, or similar light materials.

6. To establish the correct street right-of-way line, the property line pins must be in place or the sidewalk.

C. All of the above requirements must be complied with to the satisfaction of the City before the water meter will be installed.

D. A service charge will be assessed for crew time when the prerequisites are not met before the scheduled item for setting a meter. This fee must be paid before the meter installation will be rescheduled.

E. Any required re-setting of the water meter following initial installation shall be done by the City at the expense of the Developer or Contractor.

F. Place meter can in park strip or 1 foot behind sidewalk.

G. Install setter no closer than 24" of ground surface.

H. Lids shall be flush with top of sidewalk elevation.

3.06 DISINFECTION OF CULINARY WATER PIPING SYSTEM

A. Flush and disinfect system in accordance with Section 02675.

3.07 TESTING OF WATER PIPING SYSTEMS

A. Test pipeline system in accordance with Section 02660.

3.08 TRACER WIRE INSTALLATION

A. Copper tracer wire to be installed the total length of pipeline with a branch to each tee, cross, and fire hydrant. Copper tracer wire should be run to each lateral as shown in the Standard (See Detail).

1. Copper wire should be #12 gauge single strand jacketed wire, manufactured for underground service.

2. Wire shall be continuous without breaks. Splices shall be made with petroleum filled wire nut caps.

3. Tracer Wire to be secured to top of pipe at a minimum of every Ten feet, by means other than metallic.

4. Tracer Wire should be brought up in all fire hydrants in culinary water lines, and in the first lateral of each street for pressurized irrigation (not to exceed 500 feet).

B. A continuity test shall be performed by the contractor in the presence of the city engineer prior to paving.

3.09 FIELD QUALITY CONTROL

A. Compaction testing will be performed in accordance with section 02250.

B. If tests indicate Work does not meet specified requirements, remove work, replace, and retest.

END OF SECTION

SECTION 02675

DISINFECTION

PART 1 GENERAL

1.01 SECTION INCLUDES

A. Disinfection of potable water system.

B. Test and report results.

1.02 REFERENCES

A. AWWA A100-15: AWWA Water Wells.

B. AWWA B300-10: AWWA Hypochlorites.

C. AWWA B301-10: AWWA Liquid Chlorine.

D. AWWA C651-14: AWWA Disinfecting Water Mains.

E. AWWA C652-11: AWWA Disinfection of Water-Storage Facilities.

F. State of Utah: Public Drinking Water Regulations, Part II. Including Rule R309-550-8(10), Disinfecting Water Distribution Systems

1.03 DEFINITIONS

A. Disinfectant Residual: The quantity of disinfectant in treated water.

B. ppm: Parts per million.

1.04 SUBMITTALS

A. Contractor's evidence of experience in disinfection.

B. Bacteriological laboratory's evidence of certification.

C. Disinfection Report: 3 copies including:

1. Date issued.

2. Project name and location.

3. Treatment contractor's name, address and phone number.

4. Type and form of disinfectant used.

5. Time and date of disinfectant injection started.

6. Time and date of disinfectant injection completed.

7. Test locations.

8. Initial and 24 hour disinfectant residuals in ppm for each outlet tested.

9. Time and date of flushing start.

10. Time and date of flushing completion.

11. Disinfectant residual after flushing in ppm for each outlet tested.

D. Bacteriological Report: 3 copies including:

1. Date issued.

2. Project name and location.

3. Laboratory's name, certification number, address, and phone number.

4. Time and date of water sample collection.

5. Name of person collecting samples.

6. Test locations.

7. Time and date of laboratory test start.

8. Coliform bacteria test results for each outlet tested.

9. Certification that water conforms or fails to conform to bacterial standards of State of Utah public drinking water regulations.

10. Bacteriologist's signature.

1.05 QUALITY ASSURANCE

A. Affidavit by manufacturer that disinfectant conforms to AWWA standards.

B. Bacteriological Laboratory: Certified by State of Utah.

1.06 PRODUCT HANDLING

A. Store and protect disinfectant in accordance with manufacturer's recommendations to protect against damage or contamination. Do not use unsuitable disinfectant.

B. Follow all instruction labeling for safe handling and storage of disinfectant materials.

1.07 REGULATORY REQUIREMENTS

A. Conform to State of Utah public drinking water regulations.

PART 2 PRODUCTS

2.01 DISINFECTANT

A. Liquid Chlorine: AWWA B301 with chlorine 99.5 percent pure by volume.

B. Sodium Hypochlorite: AWWA B300 with not less than 100 grams per liter available chlorine.

C. Calcium Hypochlorite: AWWA B300 with 65 to 70 percent available chlorine by weight in granular form.

D. Powder, tablet, or gas according to manufacturer's specification.

PART 3 EXECUTION

3.01 PREPARATION

A. Prior to starting the disinfection procedure ensure the potable water system is completed, cleaned, tested in accordance with Section 02660 and ready for disinfection.

B. Ensure that the pipeline to be disinfected is not connected to the existing system.

3.02 DISINFECTION OF WATER LINES

A. Use one of the approved methods in AWWA C651-05.

B. Chlorination shall provide a minimum of 25 ppm residual after 24-hours contact in the pipeline. In general, this residual may be expected with an application of 50 ppm although some conditions may require more.

C. Chlorine, in the form of a 1% slurry of high test calcium hypochlorite (HTH, Perchloron, Pittchlor, etc.) shall be fed into the pipeline in such a manner as to mix with the water flowing in the pipeline. (A 1% slurry results from mixing 1 pound of the calcium hypochlorite with 7.50 gallons of water.)

D. The following table provides information as to the required quantity of slurry to be used per 100 feet of pipe to provide a chlorine concentration of 50 ppm:

Pipe Size (In.)	Vol. Of 100 Ft. Length (gal.)	Required Amount of Slurry (gal.)
4	65	0.33
6	147	0.74
8	261	1.3
10	408	2.0
12	588	3.0
16	1044	5.2

E. During the process of chlorinating the pipeline all valves and other pipeline appurtenances shall be operated several times to provide sufficient contact with the chlorinating agent.

3.03 DISINFECTION OF CULINARY WELLS

A. Use one method defined under AWWA A100 as approved by City Engineer.

B. Do not start disinfection until well is thoroughly cleaned.

C. Use a disinfecting solution containing a minimum of 50 ppm residual chlorine.

3.04 DISINFECTION OF WATER STORAGE RESERVOIRS

A. Use one method defined under AWWA C652, as approved by City Engineer.

B. Do not start disinfection until water storage tank is thoroughly cleaned.

C. Provide and use necessary safety equipment for workers in contact with disinfectant or gasses they may produce.

3.05 QUALITY CONTROL - BACTERIOLOGICAL TEST

A. No samples for testing shall be taken sooner than 24 hours after system flushing.

B. Sample water at each of the following locations, as applicable:

1. Where water enters system.

2. Ends of piping runs.

3. Remote outlets.

C. Analyze water samples in accordance with State of Utah requirements.

D. If bacteriological test proves water quality to be unacceptable, repeat system treatment.

E. Water systems shall not be accepted or placed into service until a negative bacteriological test is made on water taken. Repeat dosing as necessary until a negative test is obtained. Provide a copy of the negative bacteriological test to City Engineer.

F. It shall be the developer's responsibility to submit and pay for the bacteriological test.

3.06 FLUSHING AND DISPOSAL OF DISINFECTANT

A. After the 24 hour retention period, flush the chlorinated water from the main until chlorine measurements show the concentration in the water leaving the main is no higher than that generally prevailing in the system or is acceptable for domestic use.

B. Legally dispose of disinfecting water and ensure no chlorine buildup or damage to the environment.

C. Failing to flush the line may require Contractor to replace all gaskets and valves within the system at Contractor's expense.

END OF SECTION

SECTION 02720

STORM SEWER SYSTEMS

PART 1 GENERAL

1.01 SECTION INCLUDES

A. The requirements for pipe material and installation in sewer and drainage collection systems. All materials and workmanship shall strictly comply with the Utah State Plumbing Code.

B. For sanitary sewer specifications and standard drawings refer to Midway Sanitation District Construction Specifications.

1.02 REFERENCES

A. AASHTO-291: Standard Specification for Carbon Steel Bolts and Studs, 60,000 psi Tensile Strength.

B. ASTM D 1248: Standard Specification for Polyethylene Plastics Molding and Extrusion Materials.

C. ASTM D 2239: Standard Specification for Polyethylene (PE) Plastic Pipe (SDR-PR) Based on Controlled Inside Diameter.

D. ASTM D 2321: Standard Practice for Underground Installation of Flexible Thermoplastic Sewer Pipe.

E. ASTM D 2657: Standard Recommended Practice for Heat Joining of Thermoplastic Pipe and Fittings.

F. ASTM D 2774: Standard Recommended Practice for Underground Installation of Thermoplastic Pressure Piping.

G. ASTM D 3261: Standard Specification for Butt Heat Fusion Polyethylene (PE) Plastic Fittings for Polyethylene (PE) Plastic Pipe and Tubing.

H. ASTM D 3350: Standard Specification for Polyethylene Plastics Pipe and Fittings Materials.

I. ASTM F 405: Standard Specification for Corrugated High Density Polyethylene (PE) Tubing and Fittings.

J. ASTM F 667: Standard Specification for Large Diameter Corrugated High Density Polyethylene Tubing and Fittings.

K. ASTM F 1055: Standard Specification for Electofusion Type Polyethylene Fittings for Outside Diameter Controlled Polyethylene Pipe and Tubing.

1.03 DEFINITIONS

A. Standard Dimension Ratio (SDR): Average diameter of pipe divided by the minimum wall thickness. The diameter may be either inside or outside measurement depending upon which standard is referenced.

B. Code Designation: A rating of polyethylene pipe materials by the Plastic Pipe Institute. The designation PE 3408 designates the type of plastic pipe (PE), the grade (34), and the hydrostatic design stress measured in units of 100 psi (08).

1.04 SUBMITTALS

A. Manufacturer's affidavit certifying product was manufactured, tested and supplied in accordance with applicable references in this section together with a report of the test results and the date each test was completed.

PART 2 MATERIALS

2.01 REINFORCED CONCRETE PIPE

A. Reinforced concrete pipe shall be used for all sanitary sewers and storm drains of size larger than 18-inches and for all sewers and drains of smaller size where installation does not provide a cover of at least 3 feet over the top of the pipe.

B. Reinforced concrete pipe shall comply with the requirements of AASHTO M-170 with bell and spigot rubber gasket type joints for sanitary sewers and the alternate option of tongue and groove mortar joints for storm drain lines.

2.02 CORRUGATED METAL CULVERT PIPE

A. Galvanized or aluminized steel

1. Material according to ASTM A-929

2. Pipe according to AASHTO M-36

3. Design according to ASTM A-796

4. Installation according to ASTM A-798

B. Asphalt dipped according to ASTM A-849

C. Pipe shall be Galvanized, Aluminized, or Asphalt dipped as required by City Engineer.

D. Minimum No. 14 gage plate thickness.

E. Pipe must be a minimum of 15-inches.

2.03 SUBSURFACE DRAIN PIPE

A. Pipe

1. Perforated PVC (ASTM D-1784).

2. Perforated Concrete Sewer Pipe (AASHTO M-86 or M-170).

3. Corrugated polyethylene piping (ASTM F-405-77a).

B. Bedding shall be drain rock.

2.04 HIGH DENSITY POLYETHYLENE PIPE (HDPE)

A. Smooth pipe systems

1. Material: Polyethylene code designation PE 3408 as rated in ASTM D 2239 with a minimum ASTM D 3350 cell classification of 345434C, and an SDR or pressure class rating as indicated.

2. Fittings: Manufactured of same resin as the pipe.

3. Joints:

a. Thermally welded butt fusion in accordance with ASTM D 3261.

b. Flanged in accordance with ASTM D 2657.

c. Ultra high molecular weight electofusion tape with a polyethylene coupler meeting ASTM F1055 requirements.

4. Nuts and Bolts: Carbon steel machined heavy hex heads, Class 2 fit in accordance with ASTM A 307; Grade B, threads in accordance with ASME B1.1 Tape wrap steel materials for protection against corrosion after piping installation.

B. Corrugated Pipe Systems

1. Material: "High density polyethylene pipe shall be smooth lined and meet the requirements of AASHTO M294 Type S."

2. Material: Polyethylene, in accordance with ASTM F 405 or ASTM F 667, Type III, Category 4 or 5, Grade P33, Class C, or Grade P34, Class C as defined by ASTM D 1248.

3. Fittings: Manufactured of same resin as the pipe.

4. Joints: Bell and Spigot Type.

C. Pipe Markings

1. Mark pipes continuously to identify:

   a. Manufacturer's name (or trade mark) and code.

   b. Nominal size.

   c. Polyethylene code designation.

   d. SDR rating. (Not applicable to corrugated polyethylene.)

   e. Date of manufacture.

   f. Pressure class. (Not applicable to corrugated polyethylene.)

   g. ASTM or AWWA designation number.

D. All storm pipe must be a minimum of 18-inch in diameter without prior approval from Engineer.

PART 3 EXECUTION

3.01 PIPE LAYING

A. Gaskets shall be fitted properly in place and care shall be taken in joining the pipe units to avoid twisting of gaskets.

B. Joints shall be clean and dry and a joint lubricant, as recommended by the pipe supplier, shall be applied uniformly to the mating joint surfaces to facilitate easy positive joint closure.

C. If adjustment of position of a pipe length is required after being laid, it shall be removed and rejointed as for a new pipe.

D. When laying is not in progress, the ends of the pipe shall be closed with tight fitting stopper to prevent the entrance of foreign material.

E. In addition to the above requirements all pipe installation shall comply to the specific requirements of the pipe manufacturer.

F. HDPE shall be installed as per manufacturer’s instructions, ASTM D 2321 or ASTM D 2774 as applicable.

G. Concrete collars are required at all storm drain pipe connections to manholes or inlets. The concrete collar shall seal the storm drain pipe to the manhole or inlet.

H. All sewer repairs or joints that abut without a bell and spigot or mechanical joint shall use an approved gasketed solid sleeve, a “Fernco Stainless Steel Shear Ring”, or a “Shear Guard”, or approved equal with concrete support saddle.

3.02 GRAVEL FOUNDATION FOR PIPE

A. Refer to Section 02225

3.03 COMPACTION

A. Refer to Section 02250.

3.04 CATCH BASIN

A. Maximum spacing between catch basins / inlet boxes shall not exceed 500 feet unless approved by the City Engineer.

B. Minimum of 15 inch pipe diameter is required.

C. See Standard Drawing: “Sump Disposal, Storm Drain -3” for details on snout installation.

END OF SECTION

SECTION 02745

CHIP SEAL COAT

PART 1 GENERAL

1.01 SECTION INCLUDES

A. Materials and procedures for applying liquid or emulsified asphalt on a cleaned surface.

B. Cover materials.

1.02 REFERENCES

A. AASHTO M 140: Emulsified Asphalt.

B. AASHTO M 208: Cationic Emulsified Asphalt.

C. AASHTO M 226: Viscosity Graded Asphalt Cement.

D. AASHTO T 11: Materials Finer Than 75 µm (No. 200) Sieve in Mineral Aggregates by Washing.

E. AASHTO T 19: Unit Weight and Voids in Aggregate.

F. AASHTO T 27: Sieve Analysis of Fine and Coarse Aggregates.

G. AASHTO T 96: Resistance to Abrasion of Small Size Coarse Aggregate by Use of the Los Angeles Machine.

H. AASHTO T 104: Soundness of Aggregates by Use of Sodium Sulfate or Magnesium Sulfate.

PART 2 PRODUCTS

2.01 ASPHALTIC CEMENT

A. As specified. Meet AASHTO M 226, Table 2 and as modified below:

1. Delete “Thin-Film Oven Test” requirement.

2. Change ductility requirements for AC 10 (PG 52-22) and AC 20 (PG 58-22) to Ductility, 4.0 degrees C, 15+ cm per minute.

2.02 CATIONIC EMULSIONS

A. Must meet UDOT 02745, and emulsion type:

1. LMCRS-2

2.03 COVER MATERIAL

A. Crushed slag or crushed natural aggregates with a maximum dry unit weight of 100 lb/ft^3. Meet AASHTO T 19.

B. Grade with the following limits to meet the specified test standard in AASHTO T 27.

Table 1 - AASHTO T 11

Sieve Size	Type A	Type C
1/2" (12.5 mm)	100	100
3/8" (9.5 mm)	95-100	70-90
#4 (4.75 mm)	5-45	0-5
#8 (2.36 mm)	0-5	0-3
#200 (75 µm)	0-1	0-1.5

C. Wear: Maintain at less than 30 percent as per AASHTO T 96.

D. Weight loss: Maintain at less than 10 percent as per AASHTO T 104.

E. Round Aggregate: Do not use material that contains more than 20 percent by weight with all round faces. Must meet UDOT Materials Manual 8-929.

F. Stripping: More than 90 percent retention.

G. Polishing: Do not use polished aggregates unless the ENGINEER is supplied with test reports proving satisfactory friction values.

2.04 SOURCE QUALITY CONTROL - COVER MATERIAL

A. ENGINEER may require contractor to sample and test stockpiles using Table 2.

Table 2

Stockpiles - Samples and Tests	
Lot Quantity (Ton)	**Number of Samples**
Lot ≥ 2535	5
1540 < Lot < 2535	4
Lot ≤ 1540	3

B. ENGINEER will accept stockpiles between 0 Ton and 2535 Ton when:

1. The average gradation of the samples falls within the gradation band.

2. Not more than one sample is outside the gradation band by more than 2 percentage points on any one sieve.

C. ENGINEER will accept stockpiles 2536 Tons or greater when:

1. The average gradation falls within the band.

2. Not more than 2 samples are outside the gradation band by more than 2 percentage points on any one sieve.

D. No tolerance will be allowed for the minus #200 (75 µm) portion of cover material as per AASHTO T 11.

2.05 FLUSH COAT

A. Use one of the following emulsions agreed upon by the Engineer, diluted two parts concentrate to one part water by the Manufacturer:
1. CSS-1
2. CSS-1h

PART 3 EXECUTION

3.01 PREPARATION

A. Clean the surface of all dirt, sand, dust, or other objectionable material.

B. Protect all structures from being spattered or marred including manholes, valve covers, monuments, guardrail, guide posts, etc.

C. Notify property owners 48 hours prior to chipping operations.

3.02 LIMITATIONS

A. Obtain written approval from the ENGINEER before placing seal coat before May 15 or after August 20.

B. Lay seal coat when the pavement surface temperature is:

1. 70 degrees F and rising in the shade.

2. Below 120 degrees F.

C. Do not place seal coat during rain, when the surface is wet, or during other adverse weather conditions.

D. Apply bituminous flush coat material after receiving approval from the Engineer and as soon as possible within 24 to 48 hours after application of the cover material.

1. Apply bituminous flush coat material when the air temperature in the shade is 50 degrees F and rising and the pavement temperature is 70 degrees F and rising.

2. Do not apply bituminous flush coat material during fog, rain, or other adverse conditions.

3.03 COVER MATERIAL STOCKPILE

A. Construct either:

1. Individual stockpiles containing material for a single day of application, or

2. Elongated stockpiles, maximum 25 ft in height, 30 ft top width, with daily materials identified.

3.04 TEMPORARY PAVEMENT MARKER APPLICATION

A. Place Type “B” markers on center lines and Type “W” markers on lane lines at 12 m intervals before applying asphalt.

B. Place the reflective tape facing traffic when using Type “W” markers.

C. Apply temporary covers to catch basins, manholes, water and irrigation valves, and other such utility structures with plastic, fabric, or other material approved by Engineer. Sand or other aggregate will not be allowed.

1. Remove covers immediately after the rolling is complete.

3.05 ASPHALT MATERIAL APPLICATION

A. Use a distributor equipped with a hydrostatic system and full circulating spray bar to apply the emulsion at the specified rate, maintaining a tolerance of ±0.03 gal/sy.

1. Spray the application at a rate sufficient to obtain 60 to 70 percent chip embedment after completion of rolling operations as determined by the Engineer
2. Application rates may vary throughout the project depending on existing conditions.
3. Equipment is subject to inspection and approval by the Engineer.
4. Apply the asphalt emulsion at a minimum temperature of 145 degrees F.

B. Maintain a distance of not more than 100 ft between the distributor and the chip spreader.

3.06 COVER MATERIAL APPLICATION EQUIPMENT

A. Use a BearCat, or Etayre Spreader, or equipment of equal quality.

B. Spread aggregate at the specified rate of 22 lb/sy to 27 lb/sy, maintaining a tolerance of ±1 lb/sy.

3.07 SURFACE ROLLING

A. Use pneumatic-tire rollers in a longitudinal direction to roll surface after the cover material has been satisfactorily spread.

B. Use equipment with at least 2 rollers in front and 1 roller in back. The last roller serves as a finish roller.

C. Four passes minimum required to orient and seat the aggregate adequately for proper embedment.

3.08 FLUSH COAT APPLICATION

A. Clean the surface of all dirt, sand, dust, loose chips, and other objectionable material to the satisfaction of the Engineer.

B. Apply the bituminous flush coat at a minimum rate of 0.11 gal/yd^2. Keep traffic off the flushed surface until the bituminous material has set sufficiently to prevent tracking or pick-up.

C. Provide vendors bill of lading certifying the material was diluted in accordance with paragraph 2.05 of this section, "Flush Coat." The Engineer may sample and test this material for specification compliance.

3.09 TRAFFIC CONTROL

A. After spreading aggregate, provide a minimum of 4 hours of traffic control.

B. Sweep the surface before allowing uncontrolled traffic on the sealant.

END OF SECTION

SECTION 02765

PAVEMENT MARKING PAINT

PART 1 GENERAL

1.01 SECTION INCLUDES

A. Furnish Acrylic Water Based pavement marking paint. Refer to this Section, article 2.02 for resin requirement.

B. Apply to hot mix asphalt or portland cement as edge lines, center lines, broken lines, guidelines, contrast lines, symbols, and other related markings.

C. Remove pavement markings.

1.02 RELATED SECTIONS Not Used

1.03 REFERENCES

A. AASHTO M 247: Standard Specification for Glass Beads Used in Traffic Paints

B. ASTM D 562: Standard Test Method for Consistency of Paints Measuring Krebs Unit (KU) Viscosity Using a Stormer-Type Viscometer

C. ASTM D 2205: Standard Guide for Selection of Tests for Traffic Paints

D. ASTM D 2743: Standard Practices for Uniformity of Traffic Paint Vehicle Solids by Spectroscopy and Gas Chromatography

E. ASTM D 2805: Standard Test Method for Hiding Power of Paints by Reflectometry

F. ASTM D 3723: Standard Test Method for Pigment Content of Water-Emulsion Paints by Low-Temperature Ashing

G. ASTM D 3960: Standard Practice for Determining Volatile Organic Compound (VOC) Content of Paints and Related Coatings

H. ASTM D 4451: Standard Test Method for Pigment Content of Paints by Low-Temperature Ashing

I. ASTM D 5381: Standard Guide for X-Ray Fluorescence (XRF) Spectroscopy of Pigments and Extenders

J. ASTM E 1347: Standard Test Method for Color and Color-Difference Measurement by Tristimulus (Filter) Colorimetry

K. Federal Standards

L. Manual on Uniform Traffic Control Devices (MUTCD)

M. UDOT Standard Specifications – Pavement Marking Paint Section 02765

N. ASTM E 1346 and ASTM D 2805

1.04 DEFINITIONS Not Used

1.05 SUBMITTALS Not Used

1.06 ACCEPTANCE

A. Provide documentation of the manufacturer and production batch identification for the paint used.

B. Provide fixtures such as ball valves, gate valves, or others on paint truck for the purposes of obtaining field samples.

C. Agitate the paint to allow for thorough mixing. Follow paint manufacturer's recommendation for agitation and mixing times.

D. Stop all agitation before sample is drawn.

E. Calibrate all meters on the paint truck annually and certify for application rate verification.

1. Use the following calibration tolerances for meters:

a. Paint: ± 0.1 gal

b. Beads: ± 0.5 lb/gal

2. Keep a clean, legible copy of calibration report with the paint truck.

3. Provide a copy of certification at the Engineer's request.

F. The Engineer will:

1. Visually inspect lines, legends, symbols, and messages to verify compliance with the required dimensions.

2. Inspect at a minimum at the end of each production day.

3. Verify quantities applied by either of the following methods:

a. Measuring both paint and bead tanks prior to and after application.

b. Witnessing the meter readings prior to and after application.

1) A printout of meter readings, in lieu of witnessing, may be accepted at the Engineer's discretion.

4. Sample in accordance with the UDOT Materials Manual of Instruction, Part 8-932 and the UDOT Minimum Sampling and Testing Requirements.

G. Repaint any line or legend failing to meet bead adherence and dimensional requirements.

PART 2 PRODUCTS

2.01 PAINT

A. Meet the requirements for Acrylic Water Based Paint as listed in Table 4:

Table 4

Paint Requirements				
Property	White	Yellow	Black	Test
Pigment: Percent by weight	63.0	63.0	63.0	ASTM D 3723
Total Solids: Percent by weight, minimum	79.0	79.0	79.0	ASTM D 2205
Nonvolatile vehicle: Percent by weight vehicle, minimum*	43.0	43.0	43.0	ASTM D 2205
Viscosity, KU @ 77 degrees F	80 - 95	80 - 95	80 - 95	ASTM D 562
Density, lb/gal	14.1 ± 0.3	14.1 ± 0.3	14.1 ± 0.3	ASTM D 2205
Volatile Organic Content (VOC): lb/gal, maximum	1.25	1.25	1.25	ASTM D 3960
Titanium Dioxide Content, lb/gal	1.0 min	0.2 max	N/A	ASTM D 5381
Color Definition	37875	33538	N/A	Federal Standard 595B
Directional Reflectance Minimum	90.0	50.0	N/A	ASTM E 1347
Dry Opacity: Minimum (5 mils wet)	0.95	0.95	N/A	ASTM D 2805

* Binder: 100 percent acrylic cross-linking polymer, by weight, as determined by infrared analysis and other chemical analysis available to UDOT. Refer to ASTM D 2205.

B. No-Pick-Up Time

1. Paint may not smear or track three minutes after application to the roadway using standard application equipment, at the mil thickness required, and with an ambient shaded temperature of at least 50 degrees F.

C. Additional requirements:

1. Free of lead, chromium, or other related heavy metals. Refer to ASTM D 5381.

2. Refer to ASTM D 2743, ASTM D 4451 and ASTM D 5381: Tests used to verify paint samples meet ASTM requirements.

2.02 GLASS SPHERES (BEADS) USED IN PAVEMENT MARKING PAINT

A. Specific Properties: Meet AASHTO M 247 with the following exceptions.

1. Gradation:

Longitudinal Lines:	
Passing a No. 18 sieve, percent	65-80
Passing a No. 30 sieve, percent	30-50
Passing a No. 50 sieve, percent	0 – 5
Transverse Markings:	
Passing a No. 20 sieve, percent	95 - 100
Passing a No. 30 sieve, percent	45 - 70
Passing a No. 50 sieve, percent	5 - 25
Passing a No. 80 sieve, percent	0 – 5

2. Beads: Silane adhesion coating.

3. Roundness - The glass beads will have a minimum of 80 percent true spheres.

B. Beads used in Temporary Pavement Markings meet the above or AASHTO M 247 Type II uniform gradation.

C. Glass spheres (beads) NOT required in Parking Stall Striping.

PART 3 EXECUTION

3.01 PREPARATION

A. Line Control.

1. Establish control points at 100 ft intervals on tangent and at 50 ft intervals on curves.

2. Maintain the line within 2 inches of the established control points and mark the roadway between control points as needed.

a. Remove paint that is not placed within tolerance of the established control points and replace at no expense to the Department. Refer to this Section, article 3.4.

b. Maintain the line dimension within 10 percent of the width and length dimensions defined in Standard Drawings.

B. Remove dirt, loose aggregate and other foreign material and follow manufacturer's recommendations for surface preparation.

3.02 APPLICATION

A. Apply Pavement marking paint at the following wet mil thickness requirements.

1. 20 – 25 wet mils for all longitudinal markings.

Example Calculation: (Verify wet mil thickness)

$$\text{Wet Mils} = \frac{(0.133681\ ft^3/gal) * 12000\ mil/ft}{(X\ ft/gal)(Z\ ft)}$$

Where
X = application rate. (Meter readings or dipping tanks).
Z = line width measured in feet.
12000 = conversion from ft to mil
0.133681 = conversion from gallons to cubic feet.

For information only: Approximate application rate for required mil thickness requirements.

a. 4 inch Solid Line: From 190 to 240 ft/gal
b. 4 inch Broken Line: From 760 to 960 ft/gal
c. 8 inch Solid Line: From 95 to 120 ft/gal

2. 23 – 40 wet mils for all painted legends as determined by a wet mil gauge.

B. Refer to Table 1 for pavement markings that are less than required wet mils in thickness.

C. No additional payment for pavement markings placed in excess of required wet mils in thickness or exceeding dimensional requirements outlined in this Section, article 3.01 paragraph A.

D. Glass Sphere (Beads): Apply a minimum of 8 lb/gal of paint, the full length and width of line and pavement markings.

1. Do not apply glass beads to contrast lines (black paint).

E. Begin striping operations no later than 24 hours after ordered by the Engineer.

F. At time of application apply lines and pavement markings only when the air and pavement temperature are:

1. 50 degrees F and rising for Acrylic Water Based Paint.

3.03 CONTRACTOR QUALITY CONTROL

A. Application Rate: Verify that the paint and beads are being applied within specified tolerances prior to striping.

B. Curing: Protect the markings until dry or cured. In the event that the uncured marking is damaged the marking will be reapplied and track marks left on the pavement will be removed at no additional cost to the City.

3.04 REMOVE PAVEMENT MARKINGS

A. Use one of these removal methods:

1. High pressure water spray,

2. Sand blasting,

3. Shot blasting,

4. Grinding. (Grinding is not allowed on the final surfacing unless the Engineer grants prior written approval.)

B. Do not eliminate or obscure existing striping, in lieu of removal, by covering with black paint or any other covering.

1. The Engineer may grant prior written approval for use of black paint or other obscuring material for work durations shorter than “long term stationary” as defined in the Temporary Traffic Control section of the MUTCD.

C. Use equipment specifically designed for removal of pavement marking material.

END OF SECTION

SECTION 02772

PONDS

PART 1 GENERAL

1.01 SECTION INCLUDES

A. Clear pond site and dispose of debris and unsuitable material.

B. Materials for dike.

1.02 REFERENCES

A. AASHTO M 145: Recommended Practice for the Classification of Soils and Soil-Aggregate Mixtures of Highway Construction Purposes.

1.03 SUBMITTALS

A. Laboratory analysis report of fill to be used in dikes in accordance with the sections referenced in this section and AASHTO M 145.

1.04 PERFORMANCE REQUIREMENTS

A. Protection: Do not contaminate embankment materials with debris or unsuitable material. Protect existing improvements, trees, structures or other items from damage during construction.

B. Dust Control: Thoroughly moisten all surfaces to prevent dust being a nuisance to the public, neighborhood, and concurrent performance of separate work on site.

C. Testing: 1 density test for each 100 square yard lift of backfill compacted in the Work.

1.05 JOB CONDITIONS

A. Do not interrupt surface drainage systems at site without City Engineer's approval.

B. Correct any damage caused by runoff or erosion during construction.

PART 2 PRODUCTS

2.01 BACKFILL SOILS

A. Native Fill: In accordance with Section 02205.

B. Common Fill: In accordance with Section 02205.

C. Select Fill: In accordance with Section 02206.

D. Impermeable Embankment: A-6 (CL), or A-4 (CL) material as defined in AASHTO M 145 with a plasticity index of at least 10, and a coefficient of permeability of less than 7 x 10-6 cm/sec.

E. Obtain City Engineer's approval of the material to be supplied prior to beginning construction.

2.02 GEOTEXTILE MATERIALS

A. Non-biodegradable sheet material that is inert to soil chemicals, resistant to molds, mildew, acids and alkalies, and within a pH range of 3 to 12.

PART 3 EXECUTION

3.01 DETENTION PONDS

A. It is the intent of the City to include each retention and detention pond as part of a lot, such that the lot owner can maintain the pleasing appearance of the pond. All public ponds shall be adjacent to and accessible from the public right-of-way or approved by City Engineer. The City shall have a maintenance easement over the pond. The maintenance easement shall restrict the lot owner from modifying the elevation or design of the pond. The design and construction of each pond should be esthetically pleasing and usable for the lot. The maximum pond depth shall be four (4) feet unless approved by the City engineer.

B. Freeboard: 1 foot dikes, 1 foot on excavations.

C. Slopes: Not steeper than 5:1 interior and 4:1 exterior, 1% bottom slope.

D. Landscaping: Grass or other suitable landscaping materials with an irrigation systems shall be installed by the developer. If the lot will not be built on prior to the grass dying, or the grass becoming a maintenance issue, the developer may escrow the cost of the grass and the irrigation system with the City.

E. Access: Provide 20' access for maintenance unless approved by the City engineer.

F. Detention ponds shall be designed for a minimum 25 year, maximum storm during a 24 hour period storm, a release rate of 0.1 cfs per acre, and provisions for an emergency overflow that will avoid flood damage to surrounding properties.

G. Retention ponds will be allowed if no suitable discharge point exists for conveying storm water away from the site. These ponds shall be designed for a minimum 100 year, maximum storm during a 24 hour period storm with appropriate features for maintaining water quality and percolating water into the ground.

H. Pond inlets and outlets shall have trash racks or grates installed and appropriate upstream oil separator.

3.02 EXCAVATION AND PREPARATION

A. In accordance with Section 02225.

B. Remove and stockpile all topsoil material for later placement on the outer dike surfaces.

C. Level areas where dikes are to be constructed. Unless indicated otherwise scarify the top 12" of the base material and compact to a minimum Standard Proctor of 92 percent in accordance with Section 02250.

D. Ponds shall be designed for a minimum of 25 year 24 hour storm with capabilities of 100 year overflows.

3.03 EMBANKMENT CONSTRUCTION

A. Compact backfills to an average Standard Proctor density of 95 percent in accordance with Section 02250 with no single density reading less than 92 percent.

B. Place embankment materials in lifts consistent with the compaction equipment used.

C. Do not construct embankment with frozen or unapproved material.

D. Shape dikes to the slopes indicated not steeper than 5:1 interior and 4:1 exterior slopes.

E. Top of bank shall not be less than 10-feet wide with a 2% slope toward pond.

F. A minimum of 1-feet free board shall be maintained.

G. Overflow shall be provided by safety weir when possible.

3.04 TOLERANCES

A. Dike Surface: Plus or minus 3" from true line and grade.

B. Dike Width: Plus or minus 6" from true line and grade.

3.05 FINISHING

A. After dikes have been constructed to the lines and grades indicated, spread topsoil 6-inches deep on dikes and pond to a uniform grade and slope.

B. Pond shall be replanted with sod, hydro-seed, or approved native occurring grass.

C. Pond shall be irrigated with an automatic pressurized irrigation system.

D. Dispose of excess or unsuitable materials and level all affected areas.

E. Leave site free of excess fill material and debris.

END OF SECTION

SECTION 02832

FENCES

PART 1 GENERAL

1.01 SECTION INCLUDES

A. Chain Link Fence.

B. Wood Fence.

C. Construction Fence.

1.02 RELATED SECTIONS

A. Section 03304: Concrete anchorage for posts.

1.03 REFERENCES

A. ASTM A116: Zinc-Coated (Galvanized) Steel Woven Wire Fence Fabric.

B. ASTM A123: Zinc (Hot Dip Galvanized) Coatings on Iron and Steel Products.

C. ASTM A392: Zinc-Coated Steel Chain-Link Fence Fabric.

D. ASTM F567: Installation of Chain-Link Fence.

E. ASTM F573: Residential Zinc-Coated Steel Chain Link Fence Fabric.

F. ASTM F1083: Pipe, Steel, Hot-Dipped Zinc-Coated (Galvanized) Welded, for Fence Structures.

G. ASTM F1234: Protective Coating on Steel Framework for Fences.

1.04 QUALITY ASSURANCE

A. Perform Work in accordance with ASTM F567.

PART 2 PRODUCTS

2.01 CHAIN LINK FENCE MATERIAL AND COMPONENTS

A. Framing (Steel): ASTM F1083 Schedule 40 galvanized steel pipe, welded construction, coating conforming to ASTM F1234 Type A on pipe exterior and interior.

B. Fabric Wire (Steel): ASTM A392 zinc coated wire fabric.

C. Concrete: Type specified in Section 03304.

D. Line Posts: 1.9 inch O. D. galvanized pipe at 2.72 lbs per foot.

E. Corner, Gate, Pull, and Terminal Posts: 2.4 inch O.D. galvanized pipe at 2.65 lbs. Per foot.

F. Top Rail: 1.4 inch diameter, plain end, sleeve coupled.

G. Brace Rail: Minimum 1.6 inch O.D. galvanized pipe and adjustable 3/8 inch truss

H. Tension Wire: 7 gage, Bottom only

2.02 WOOD FENCE MATERIAL AND COMPONENTS

A. Slats: Redwood, cedar, combed spruce or other wood covering acceptable to the City Engineer or his representative.

B. Bottom and top rail: Minimum 2x4x8 cedar stud.

C. Corner, Gate, End, or Line Posts: Minimum size 4x4 cedar wood post.

D. Concrete: Type specified in Section 03304.

2.03 CONSTRUCTION FENCE MATERIAL AND COMPONENTS

A. Material:

1. Fabric to be wire mesh which shall conform to AASHTO Designation M-279, nominal 0.9999-inch Farm Grade with standard six (6) inch graduated spacing. The wire mesh shall have a Class 1 zinc coating.

2. Corner, gate, end or line posts shall be painted metal tee, U or Y channel, angular, or other approved shapes 6'6" in length.

PART 3 EXECUTION

3.01 CHAIN LINK FENCE INSTALLATION

A. Line Pole Spacing, Straight run, tangents or curves.

1. Uniform spacing.

2. Maximum 10 feet.

3. 100-foot radius or less, maximum 5 feet.

4. 100 to 200 foot radius, maximum 6 feet.

5. 200 to 500 foot radius, maximum 8 feet.

B. Set posts plumb, in concrete footings with top of footing 2 inches above finished grade. Slope top of concrete for water runoff.

C. Line Post Footing: Minimum 6 inches of concrete below bottom of post, 8 inches in diameter.

D. Corner, Gate, Pull, and Terminal Post Footing: Minimum 6 inches of concrete below bottom of post, 10 inches in diameter.

E. Brace each gate and corner post to adjacent line post with horizontal center brace rail and diagonal truss rods. Install brace rail one bay from end and gate posts.

F. Provide top rail through line post tops and splice with 6 inch long rail sleeves.

G. Do not stretch fabric until concrete foundation has cured 7 days.

H. Stretch fabric between terminal posts or at intervals of 500 feet maximum, whichever is less.

I. Position bottom of fabric 2 inches above finished grade and on a straight grade between posts. Excavate if necessary, fill only with approval of City Engineer.

J. Fasten fabric to top rail, line posts, braces, and bottom tension wire with tie wire at maximum 15 inches on centers.

K. Attach fabric to end, corner, and gate posts with tension bars and tension bar clips.

L. Changes in line of more than 30 degrees shall be considered as corners.

M. Fence fabric shall be placed on road side of posts unless otherwise indicated.

3.02 WOOD FENCE INSTALLATION

A. Construction Methods: The cedar posts shall be set true to line and grade in concrete bases at least two (2) feet in depth. All posts shall be sound and free from all decay, splits, multiple cracks, or any other defect which would weaken the posts or otherwise cause them to be structurally unsuitable for the purpose intended.

B. The maximum distance between posts in any section shall not exceed eight (8) feet. The top and bottom railing shall be securely fastened to the posts with galvanized nails or other acceptable means. Changes in line of 30 degrees or more shall be considered as corners. A minimum of six (6) inches of concrete shall be provided below the bottom of each post. End posts, corner posts, and gate posts shall have a concrete base at least twelve (12) inches in diameter. Bases for line posts shall also be twelve (12) inches in diameter.

C. Fence slats shall be placed on the roadway side of posts unless otherwise specified. The slats shall be placed approximately one (1) inch above the ground, and on a straight grade between posts by excavating high points of the ground. Filling depression will be permitted only upon approval of the City Engineer. The slats shall be sound and free from all major decay or defects which would weaken or otherwise cause them to be unsuitable for fence slats. Fastening to top and bottom railing shall be done with two (2) galvanized nails and screw at both the top and bottom rail.

3.03 CONSTRUCTION FENCE INSTALLATION

A. Construction Methods:

1. Metal fence posts shall be a spaced a maximum interval of sixteen (16) feet. Posts spacing measurements shall be made parallel to the ground slope. All posts shall be placed in a vertical position. Metal posts may be installed by driving, if this can be done without damage to the post. Otherwise, they shall be installed to the specified depth (2'6") in larger drilled or dug holes and backfilled and compacted.

2. Corner posts shall be braced in two directions. End and gate posts shall be braced in one direction.

3. Wire mesh fabric shall be drawn tight enough to eliminate all sag without causing the “tension crimps” to fail to function.

4. Any high points along the ground surface which interfere with the placing of wire mesh shall be excavated to provide at least two (2) inches of ground clearance.

5. Every alternate lateral wire in the mesh fabric shall be fastened to each post by means of a clamp.

END OF SECTION

SECTION 03200

CONCRETE REINFORCEMENT

PART 1 GENERAL

1.01 SECTION INCLUDES

A. Reinforcing steel bars, wire fabric or rod mats for cast-in -place concrete.

B. Support chairs, bolsters, bar supports, and spacers for supporting reinforcement.

1.02 REFERENCES

A. AASHTO M 254: Standard Specification for Corrosion Resistant Coated Dowel Bars.

B. ACI 301: Specifications for Structural Concrete for Buildings.

C. ACI 315: Details and Detailing of Concrete Reinforcement.

D. AASHTO M-32: Standard Specification for Steel Wire, Plain, for Concrete Reinforcement.

E. AASHTO M-55: Standard Specification for Steel Welded Wire, Fabric, Plain, for Concrete Reinforcement.

F. AASHTO M-55: Standard Specification for Deformed and Plain Billet-Steel Bars for Concrete Reinforcement.

G. ASTM A 706: Standard Specification for Low-Alloy Steel Deformed Bars for Concrete Reinforcement.

H. AWS D1.1: Structural Welding Code Steel.

I. AWS D1.4: Structural Welding Code Reinforcing Steel.

J. CRSI Document: Manual of Standard Practice.

1.03 SUBMITTALS

A. Shop drawings.

1. Indicate sizes, spacings, locations, and quantities of reinforcing steel, wire fabric, bending and cutting schedules, splicing, stirrup spacing, supporting, and spacing devices.

2. When required by Engineer, prepare shop drawings by an engineer who complies with Utah licensing law and is acceptable to Engineer.

1.04 QUALITY ASSURANCE

A. Perform concrete reinforcement work in accordance with CRSI Manual of Standard Practice

B. Comply with ACI 301.

C. Welders: AWS D1.1 or AWS D1.4 as applicable.

PART 2 PRODUCTS

2.01 MATERIALS

A. Reinforcing Steel: In accordance with AASHTO M-31 or ASTM A 706 deformed bars, grade and type as indicated, including supplementary requirements S1, either uncoated or as indicated. When no grade is indicated use 60 grade steel. Use ASTM A 706 steel if welding is indicated or allowed.

B. Welded Steel Wire Fabric: In accordance with AASHTO M-55 plain type; in flat sheets or coiled rolls either uncoated or as indicated.

C. Stirrup Steel: In accordance with AASHTO M-32.

D. Plain Dowel Bars for Expansion Joints: In accordance with AASHTO M-31, Grade 60.

1. Provide metal dowel cap at one end of dowel to permit longitudinal movement of dowel within concrete section. Design caps with 1 end closed.

2. Provide for movement equal to joint width plus ½”.

3. For load transfer bars, paint with 1 coat of lead or tar paint conforming to AASHTO M 254 and coat ½ with grease.

2.02 ACCESSORY MATERIALS

A. Tie Wire: Minimum 16 gage annealed type or a patented system accepted by Engineer.

B. Chairs, Bolsters, Bar Supports, Spacers: Sized and shaped for strength and support of reinforcement during installation and placement of concrete.

2.03 FABRICATION

A. Fabricate reinforcement in accordance with ACI, providing for the concrete cover specified in Section 03304.

B. Locate reinforcing splices not indicated on drawings at points of minimum stress. Indicate location of splices on shop drawings.

C. Weld reinforcing bars in accordance with AWS D1.4.

PART 3 EXECUTION

3.01 PLACING

A. All reinforcement to be free of loose mill scale, loose or thick rust, dirt, paint, oil or grease.

B. Place all reinforcement in the exact position indicated. With tie wire tie bars together at alternate intersections.

C. Maintain the distance from vertical forms and between layers of reinforcement by means of prefabricated chairs, ties, hangers, or other approved devices. Placing and fastening of reinforcement in each section of the Work must be approved by Engineer before concrete is placed.

D. Overlap sheets of metal mesh one square plus 6" to maintain a uniform strength. Securely fasten at the ends, edges, and support to maintain clearances.

E. Support reinforcing steel of formed flat slabs with metal chairs, precast concrete blocks or other slab bolsters. Size chairs or bolsters to position the steel in the exact location indicated. Space chairs for supporting the top steel and bolsters for supporting the bottom steel not more than 5 feet on centers in each direction. Plastic or epoxy coat that portion of the metal support in contact with the forms to prevent rust. Tie down deck steel to beams or forms at regular intervals of not more than 5 feet on centers along the beams or forms to prevent movement of the steel during placement of the concrete.

3.02 SPLICING

A. Furnish all reinforcement in the full lengths indicated unless otherwise permitted. Splicing of bars, except where indicated is not permitted without written approval from Engineer. Stagger splices where possible.

B. Unless indicated otherwise, overlap reinforcing bars a minimum of 30 diameters to make the splice. In lapped splices, place the bars and wire in such a manner as to maintain the minimum distance for clear spacing to the surface of the concrete.

C. Do not use lap splices on bars greater in diameter than No. 11 unless approved by Engineer.

D. Weld reinforcing steel only if indicated or if authorization is made by Engineer in writing. Weld in conformance to AWS D1.4.

E. Do not bend reinforcement after embedding in hardened concrete, unless permitted by Engineer.

F. Do not permit reinforcement or other embedded metal items bonded to the concrete, to extend continuously through any expansion joint, except dowels in floors bonded on only one side of joints.

3.03 PLACING EMBEDDED ITEMS

A. Place all sleeves, inserts, anchors and embedded items prior to concrete placement. Fill voids in embedded items temporarily with readily removable material to prevent entry of concrete.

B. Give all trades whose work is related to the concrete section ample notice and opportunity to introduce and/or furnish embedded items before concrete placement.

END OF SECTION

SECTION 03304

PORTLAND CEMENT CONCRETE

PART 1 GENERAL

1.01 SECTION INCLUDES

A. Portland cement concrete material requirements.

B. Mix design requirements.

1.02 REFERENCES

A. AASHTO T- 26: Standard Method of Test for Quality of Water to be Used in Concrete.

B. ACI 211.1: Standard Practice for Selecting Proportions for Normal, Heavyweight, and Mass Concrete.

C. ACI 211.3: Standard Practice for Selecting Proportions for No-Slump Concrete.

D. ACI 214: Recommended Practice for Evaluation of Strength Test Results of Concrete.

E. ACI 306: Cold Weather Concreting.

F. AASHTO M-157: Standard Specification for Ready-Mix Concrete.

G. AASHTO M-85: Standard Specification for Portland Cement.

H. AASHTO M-152: Standard Specification for Air-Entraining Admixtures for Concrete.

I. AASHTO M-194: Standard Specification for Chemical Admixtures for Concrete.

J. AASHTO M-295: Standard Specification for Fly Ash and Raw or Calcined Natural Pozzolan for Use as a Mineral Admixture in Portland Cement Concrete.

1.03 DEFINITIONS

A. Average Strength (f_{cr}): The required average strength for 3 consecutive strength tests which statistically assures no more than the permissible proportions of tests will fall below specified strength.

B. Specified Strength (f_c'): The indicated strength.

1.04 SUBMITTALS

A. Mix Design: Submit each proposed mix design 48 hours prior to use in the Work. Indicate whether mixes have been designed for pumping. Include the report the following information.

1. Water-cement ratio.

2. Proportion of materials in the mix.

3. Source and type of cement.

4. Analysis of water to be used.

5. Type and name of admixtures applied. Indicate when accelerating or retarding admixtures are to be used.

6. Slump, air content and temperature of samples.

7. Unit weight of fresh and dry light weight concrete.

1.05 QUALITY ASSURANCE

A. Use the same source and type of cement, air-entraining agent, water reducing agent, other admixtures, and aggregate.

B. In proportioning materials for mixing, use scales certified by the State of Utah. Do not use volume measurement except for water and liquid admixtures.

C. Do not change the quantity of cement per cubic yard.

D. Use of admixtures will not relax hot or cold weather placement requirements.

E. Ready-mixed concrete, in accordance with AASHTO M-157 and requirements in this Section.

F. Testing Concrete: In accordance with Section 01450.

PART 2 PRODUCTS

2.01 CEMENT

A. Type II (moderate), in accordance with ASTM M-185.

2.02 WATER

A. Water used in mixing concrete shall be clean and free from oil, acid, salt, injurious amounts of alkali, organic matter or other deleterious substances. Clean, non-staining and not detrimental. Comply with AASHTO T 26.

2.03 AGGREGATES - GENERAL

A. Gravel, crushed slag, crushed stone, or other inert material, composed of hard, strong, durable particles free of injurious coatings.

B. The materials passing the No. 200 sieve shall not exceed 1.75 percent by weight in the combined coarse and fine aggregate.

2.04 ADMIXTURES

A. Air Entrainment: pH 2.0 maximum type in accordance with AASHTO M-152.

B. Water Reducing and Water Retarding Agents: In accordance with AASHTO M-194.

1. Type A: Water reducing.

2. Type B: Retarding.

3. Type C: Accelerating.

4. Type D: Water reducing and water retarding.

5. Type E: Water reducing and accelerating.

6. Type F: High range water reducing (super plasticizer). *

7. Type G: High range water reducing and retarding. *

*The relative durability factor of water reducing admixtures shall not be less than 90 and the chlorides content (as Cl-) shall not exceed 1 percent by weight of the admixtures.

C. Calcium Chloride: None allowed.

D. Pozzolan: Pozzolan conforming to the requirements of ASTM C 618, Class F, is allowed as Portland cement replacing agent under the following conditions:

1. Do not replace more than 10 percent of the Portland Cement.

2. The ratio of replacement by weight of Pozzolan to cement shall be 1.25 to 1.0.

3. The minimum cement content shall be used in the design formulas before replacement is made.

4. Loss of ignition of pozzolan is less than 3 percent and the water requirement shall not exceed 100 percent.

5. All other requirements of this section still apply.

6. Mix designs including trial batches are required for each aggregate source and for each concrete class.

E. Fly Ash: maximum 10% fly ash will be allowed.

2.05 ENTRAINING AGENT

A. An air-entraining agent shall be used in all concrete exposed to the weather. The agent shall conform to AASHTO Designations M-152.

2.06 ACI MIX DESIGN

A. The amount by which the average strength of a concrete mix exceeds the specified strength shall be based upon no more than 1 in 100 random individual strength tests falling below the specific strength.

B. Proportion the materials in accordance with ACI 211.1, 211.2 or 211.3 as applicable to produce concrete having the following properties or limitations:

CONCRETE MIX PROPERTIES				
	Concrete Class			Concrete Collar
Properties	4000	3000	2500	4500
Specified Compressive Strength f_c' at 28 days, psi	4000	3000	2500	4500
Compressive Strength at 7 days, psi (a)	2350	2000	1675	2350
Cement content (94 lb. sacks of cement per cubic yard of concrete)	6.5	5.5	5	7
Entrained air content, (% by volume)	4 to 6	5 to 7	5 to 7	4 to 6
Slump Range, in. (b)	2 to 4	2 to 4	2 to 4	2 to 3

(a) Used for monitoring and reference purposes only.
(b) Not more than 8" after adding high range water reducer admixture (super-plasticizer) to verified 2" to 3" slump concrete.

C. The use for each class of concrete is as follows:

1. 4000 psi: Reinforced structural concrete.

2. 4000 psi: Sidewalks, curb and gutter, cross gutters, pavements and unreinforced footings and foundations.

3. 3000 psi: Thrust blocks, anchors and mass concrete.

4. Concrete Collar (4500 psi): Collars around water valves, sewer manholes, survey monuments and storm drain manholes. Concrete to have a minimum of 5 pounds per cubic yard of FORTA-FERRO Macor Synthetic fiber 2.25” long or Approved Equal.

D. Water

1. Sufficient water shall be added to produce concrete with the minimum practicable slump.

2. The slump of mechanically vibrated concrete shall not exceed 4 inches.

3. No concrete shall be placed with a slump in excess of 5 inches.

4. The maximum permissible water cement ratio (including free moisture of aggregates shall be 5 and 5 3/4 gallons per bag of cement respectively for 4000 and 3000 psi air entrained concrete.

2.07 HAND MIXING

A. Do not hand mix batches exceeding 0.5 cubic yards.

2.08 HEATING, WATER AND AGGREGATE

A. Do not allow products of fuel combustion to contact the aggregate.

B. Heat aggregate and mixing water to 150 degrees F. maximum. Heat aggregates uniformly.

C. Maintain mixed concrete temperature at time of placement between 60 and 90 degrees F.

D. Do not mix cement with water or with mixtures of water and aggregate greater than 90 degrees.

PART 3 EXECUTION

3.01 DELIVERY

A. Slump: Do not transport concrete to the work location if concrete is greater than permissible slump.

B. Discharge: After the introduction of mixing water to the cement and aggregates at the batch plant, discharge concrete from truck mixer within 90 minutes.

3.02 RE-TEMPERING

A. Adding Water: When concrete arrives at site with slump below specified, water may be added once if neither the maximum approved water/cement ratio nor the maximum slump is exceeded provided that the drum turns a minimum of 90 revolutions.

B. Super-plasticizer: Premeasure and add high range water reducers (super-plasticizer) in accordance with manufacturer's instructions. Add super-plasticizer at site using truck-mounted power injection equipment capable of rapidly and uniformly distributing the admixture to the concrete. Mix for a minimum of 3 minutes prior to discharge.

C. Re-tempering after delivery time with super-plasticizer is prohibited.

3.03 CONCRETE PLACEMENT

A. In accordance with Section 03310.

END OF SECTION

SECTION 03310

CONCRETE WORK

PART 1 GENERAL

1.01 SECTION INCLUDES

A. Cast-in-place concrete placement operations for slabs on grade, slabs on fill, structural building frame, and other concrete components.

1.02 REFERENCES

A. AASHTO M-182: Standard Specification for Burlap Cloth Made from Jute or Kenaf.

B. ACI 301: Specifications for Structural Concrete for Buildings.

C. ACI 305: Hot Weather Concreting.

D. ACI 306: Cold Weather Concreting.

E. ACI 309: Standard Practice for Consolidation of Concrete.

F. ACI 315: Details and Detailing of Concrete Reinforcement.

G. AASHTO M-148: Standard Specification for Liquid Membrane-Forming Compounds for Curing Concrete.

H. ASTM C-642: Standard Test Method for Specific Gravity, Absorption, and Voids in Hardened Concrete.

1.03 RELATED WORK

A. Manufacture of Portland cement concrete and its delivery to site, in accordance with Section 03304.

1.04 SUBMITTALS

A. Record of Placed Concrete: Record date, location of pour, quantity, air temperature, and test samples taken.

B. Product name, type, and chemical analysis of the following as applicable:

1. Curing compound.

2. Sealing compound.

3. Chemical hardener.

1.05 QUALITY ASSURANCE

A. Rejection: Concrete work which fails to meet one or more of the following requirements, and which cannot be brought into compliance shall be rejected. Engineer shall determine appropriate modifications or payment adjustments to be made.

1. Appearance: Concrete exposed to view with defects which adversely affect appearance of specified finish.

2. Strength: Strength of concrete fails to comply with any of the following requirements.

a. Low compressive or flexural strength.

b. Reinforcing steel size, quantity, strength, position, damage, or arrangement at variance with requirements.

c. Concrete which differs from required dimensions or location in such a manner as to reduce its strength or load carrying capacity.

d. Inadequate protection of concrete from extremes of temperature during the early stages of hardening and strength development.

e. Mechanical injury, construction fires, accidents, or premature removal of formwork likely to result in deficient strength development.

f. Workmanship likely to result in deficient strength.

3. Slab Tolerance: Field quality control as specified herein.

4. Material Sources: In accordance with Section 03304.

1.06 WARRANTY

A. Repair or replace defective or damaged work at no additional cost to City.

PART 2 PRODUCTS

2.01 ACCESSORIES

A. Bonding Compound: Polyvinyl acetate or acrylic base, rewettable type.

B. Vapor Retarder: 10 mil thick clear polyethylene sheet. Type recommended for below grade application.

C. Forms: In accordance with Section 02528 and ACI 315.

D. Reinforcement: In accordance with section 03200.

E. Covering: Waterproof paper, polyethylene sheet or burlap cloth complying with AASHTO M 182, Class two.

2.02 CONCRETE SURFACE CURING COMPOUND

A. Liquid membrane, in accordance with AASHTO M-148.

B. Type of Compound: Engineer to select.

1. Type 1, clear or translucent without dye.

2. Type 1-D, clear or translucent with red fugitive dye.

3. Type 2, white pigmented.

C. Class of Vehicle: Class A, no restrictions.

D. Performance Criteria of Compound: Compatible with sealing compound, if sealing compound is to be applied over concrete curing compound.

PART 3 EXECUTION

3.01 PREPARATION

A. All exposed corners shall be chamfered (3/4" x 3/4").

B. Verify that anchors, seats, plates, reinforcement, and other items to be cast into concrete are accurately placed, held securely, and will not impede placing concrete.

C. Do not allow construction loads to exceed member capacity.

D. Prepare previously placed concrete by cleaning with steel brush and applying bonding compound. Apply bonding compound in accordance with manufacturer's instructions.

E. At locations where new concrete is dowelled to existing work, drill holes in existing concrete work placed at ambient temperatures above 50 degrees F. Use of admixtures will not relax cold weather placement requirements.

F. Do not disturb reinforcement, inserts, embedded parts, and formed joints.

G. Do not break or interrupt successive pours such that cold joints occur.

H. Honeycomb or embedded debris in concrete is not acceptable.

3.02 JOINTS

A. Saw cut patterns where indicated. Saw cut control joints without raveling of the concrete. A maximum of 24 hours after pouring the concrete and prior to occurrence of any surface cracking.

3.03 CONSOLIDATION

A. In accordance with ACI 309.

B. Keep spare vibrator available during concrete placement operations.

3.04 FINISHING

A. Do not add water or retemper concrete unless Engineer's approval is secured.

B. Slab Finishing Tolerance:

1. Class A finish: 1 in 1000.

2. Class B finish: 1 in 500.

3. Class C finish: 1 in 150.

C. Finishes: In accordance with Section 03345. When type of finish is not indicated, use following finishes as applicable:

1. Sidewalks, garage floors, and ramps: Broom or belt finish.

2. Exterior concrete pavement: Broom or belt finish.

3. Exterior platforms, steps, and landings, exterior and interior pedestrian ramps, not covered by other finish materials: Nonslip finish.

4. Surfaces intended to receive bonded applied cementitious applications: Scratched finish.

5. Surfaces intended to receive roofing, except future floors, waterproofing membranes, and roof surfaces which are future floors or sand bed terrazzo: Floated finish.

6. Floors and roof surfaces which are floors intended as walking surfaces or to receive floor coverings: Troweled finish.

7. Unpainted concrete surfaces not exposed to public view: Smooth as-cast form finish.

8. Unpainted concrete surfaces exposed to public view: Rubbed finish.

9. Concrete surfaces to receive paint or plaster: Grout cleaned finish.

D. Chemical Hardener: After completion of curing, apply chemical hardener in accordance with manufacturer's instructions to all interior floor slabs which are exposed in finished work and elsewhere as indicated. After final coat of chemical hardener solution is applied and dried, remove surplus hardener by scrubbing and mopping with water. Do not place liquid floor hardener on floor areas scheduled to receive synthetic matrice terrazzo, or setting beds for tile, terrazzo, vinyl flooring, or like items.

3.05 CURING

A. General: Maintain concrete with minimal moisture loss at relatively constant temperature for period necessary for hydration of cement and hardening of concrete. Cure concrete by applying curing and sealing compound, by moisture curing, by moisture-retaining cover curing, or by combinations thereof.

B. Curing Compounds:

1. Apply curing compound to concrete slabs within 2 hours of completing final finishing operations. Apply uniformly in continuous operation. Recoat areas subjected to heavy rainfall within 3 hours after initial application. Maintain continuity of coating and repair damage during curing period. Should side forms be removed before expiration of 7 days from start of curing, coat exposed surfaces with curing compound.

2. Do not use membrane curing compounds on surfaces which are to be covered with coating material applied directly to concrete, liquid floor hardener, waterproofing, damproofing, membrane roofing, flooring (such as ceramic or quarry tile, glue-down carpet), painting, and other coatings and finish materials, unless otherwise acceptable to Engineer.

C. Moisture Curing: Provide either of the following methods.

1. Keep concrete surface continuously wet by covering with water or continuous water-fog spray.

2. Cover concrete surface with absorptive cover, thoroughly saturated with water and kept continuously wet. Place absorptive cover to provide coverage of concrete surfaces and edges, with 4" lap over adjacent absorptive covers.

3.06 SEALING

A. Surface Preparation: If necessary to remove curing compound, sandblast concrete surface. Clean surface free of dirt, oil, grease and other contaminants. If necessary use proprietary cleaning compounds (not raw acids) followed by thorough water rinsing. Use high pressure water equipment providing 1,200-2,000 psi to remove detergent residues. Do not attempt application when condensation is present.

B. Application: Spray with low pressure (20 psi) airless spray equipment. Saturate the surface to the point of rejection. On vertical surfaces apply 2 coats.

C. Coverage Rates: In accordance with manufacturer’s recommendation.

D. Paint Adhersion: Always test to verify compatibility between sealant and other proposed surface treatments.

E. Warning: Remove inadvertent splashes before the solution has dried on the surface. If sealant is a hazardous material, allow use only by professional applicator. Three (3) 4-inch cylinders shall be taken and a slump and air test shall be done at the beginning of concrete placement and every 50 cubic yards thereafter.

3.07 TESTS

A. Arrange for and perform all testing required for qualification of proposed materials and the establishment of mix designs, in determining strengths for early form removal, for cylinder tests after the addition of water, and other needs of Contractor.

B. Two slump tests, one before and one after the addition of super-plasticizer.

C. Three (3) standard 4-inch cylinder samples of concrete from trucks receiving water after addition of water.

3.08 DEFECTIVE CONCRETE

A. Modify or replace concrete not conforming to required levels, lines, details, and elevations.

B. Structural analysis and additional testing may be required at no additional cost to Owner when the strength of a structure is considered potentially deficient.

C. Patch imperfection. Refer to Section 03345 requirements.

3.09 PROTECTION AND REPAIRS

A. Immediately after placement, protect concrete from premature drying, excessively hot or cold temperatures, and mechanical injury.

B. Maintain concrete with minimal moisture loss at relatively constant temperature for period necessary for hydration of cement and hardening of concrete.

C. Random Cracks in Pavement Slabs on Grade: When cracks occur within 2 feet of expansion of construction joints, remove and repair, otherwise grout with approved epoxy grout. Use saw cuts and dowels in all cut planes.

D. All concrete curbs, gutter, sidewalks, and driveways shall be removed and replaced to the next joint or scoring lining beyond the actually damaged or broken sections.

E. In the event that joints or scoring lines do not exist or are five or more feet from the removed or damaged section, the damaged portions shall be saw cut, removed, and reconstructed to neat, plane faces.

F. All new concrete shall match, as nearly as possible, the appearance of adjacent concrete improvements.

G. Where necessary, lampblack or other pigments shall be added to the new concrete to obtain the desired results.

H. The concrete surface must not be damaged or pitted by rain.

I. The Contractor shall provide and use, when necessary, sufficient tarpaulins to completely cover all sections that have been placed within the preceding twelve (12) hours.

J. The Contractor shall erect and maintain suitable barriers to protect the finished surface.

K. Any section damaged from traffic or other causes occurring prior to its official final acceptance shall be repaired or replaced by the Contractor at his own expense in a manner satisfactory to the City Engineer.

L. Concrete surface repair method as per engineer's discretion.

M. Concrete shall not spall or show signs of spalling before the warranty expiration. All concrete with spalling shall be removed and replaced by the Contractor or Owner at his own expense. Concrete with spalling may be repaired by an approved method. The approved method must be a five step process which includes a muriatic acid wash, pressure wash with orbital nozzle, application of approved grout & cement modifier (Duraset 1000 Modified Acrylic Resin and G100 Pro-Series Grout Mix and Liquid Colorant or equal), and application of approved solvent based sealer (SuperSeal 2000 Solvent Based Acrylic Sealer or equal).

N. Curb & gutter damage shall be repaired according to the following criteria.

1. Removal and replacement of the entire section of curb and gutter is required for chips and gouges greater than ¾" deep and 3" longcracks over ¼" wide, or any damage which will result in the failure of the curb & gutter, unless an acceptable epoxy based patch is approved by the City Engineer.

2. Epoxy based patching compounds may be used as an alternative to removal and replacement for curb & gutter chips and gouges smaller than ¾" deep and 3" long. Patches shall match surrounding surface of concrete.

3. Alternative methods of repair shall be approved by the City Engineer.

O. Broken or damaged sidewalk shall be repaired according to the following criteria.

1. Epoxy based patching may be used for chips or gouges in sidewalk greater than 1/2 inch in depth but less than 3 inches in depth.

2. Removal and replacement of the entire concrete section* is required for the following types of damage:

a. Chips and gouges in or along sidewalks greater than three inches deep.
b. Cracks over ¼" in nominal width regardless of running direction.
c. <u>Multiple cracks</u> where the cracks are less than a sidewalk width apart.
d. <u>Cracks that converge creating small isolated pieces of sidewalk.</u>
e. Cracks that generally run parallel to the length of the sidewalk.
f. Cracks that circle back to the original side creating a "half moon" piece of broken concrete.
g. Cracks that allow the concrete to move vertically from the adjoining piece or section in excess of ¼" or which the inspector deems as a tripping hazard.
h. Any damage which in the inspectors' opinion was clearly the result of negligence on the part of the builder. Or damage which appears will result in failure of the sidewalk or gutter and its intended function.

*Sections may be cut and the damaged portions removed, provided no remaining or new section(s) are less than 5 feet in length. (Cut lines are considered as section lines.)

P. All concrete work shall conform to the requirements of this section.

Q. Concrete sidewalk and curb & gutter which is defective due to settlement, uneven joints, or tripping hazards may be corrected by "Concrete Lifting" as approved by Engineer. Concrete lifting shall conform to the following:

1. Concrete repair by lifting shall only be performed by a licensed contractor specializing in concrete lifting.

2. Concrete lifting shall be completed by drilling strategically placed holes in concrete. A grout, sand, Portland cement, and water mixture shall be used proportioned to harden without settlement and to sufficiently fill voids beneath the concrete. Holes shall be placed to allow for pumping the cement mixture under the concrete to lift the settled areas. Additional holes shall also be drilled to allow for filling voids created by the lifting procedure.

3. The proportion of Portland cement shall be a minimum of 5 percent by weight of dry mixture.

4. The use of the concrete lifting technique may be attempted to correct uneven adjoining sections of concrete or correct areas of defective drainage. If concrete lifting does not correct the defective concrete to the Engineers satisfaction, the concrete shall be removed and replaced.

3.10 PLACING CONCRETE IN COLD WEATHER

A. No concrete shall be placed where the air temperature is lower than 40 degrees Fahrenheit, at a location where the concrete cannot be covered or protected from the surrounding air.

B. When concrete is placed below a temperature of 35 degrees Fahrenheit the ingredients of the concrete shall be heated so that the temperature of the mixture shall not be less than 50 degrees or more than 100 degrees Fahrenheit.

C. Before mixing, the heated aggregates shall not exceed 175 degrees Fahrenheit.

D. Cement shall not be added while the temperature of the mixed aggregates and water is greater than 100 degrees Fahrenheit.

E. When there is likelihood of freezing during the curing period, the concrete shall be protected by means of an insulated covering to prevent freezing of the concrete for a period of not less than 7 days after placing.

F. Equipment for protecting concrete from freezing shall be available at the job site prior to placing concrete. Particular care shall be exercised to protect edges and exposed corners from freezing.

G. In the event heating is employed, care shall be taken to insure that no part of the concrete becomes dried out or is heated to temperatures above 100 degrees Fahrenheit.

H. The housing, covering, or other protection used shall remain in place and intact at least 24 hours after the artificial heating is discontinued.

I. For a period of five days the concrete shall be kept above 40 degrees F and below 100 degrees F.

END OF SECTION

SECTION 03345

CONCRETE FINISHING

PART 1 GENERAL

1.01 SECTION INCLUDES

A. Application procedure for concrete surface finishes.

1.02 PROJECT CONDITIONS

A. Allow concrete to cure not more than 72 hours before commencing surface finish operations, unless otherwise acceptable to Engineer.

B. Protect adjacent materials and finishes from dust, dirt and other surface or physical damage during finishing operations. Provide protections as required and remove from site at completion of Work.

C. For surfaces to be blast finished, perform abrasive blasting within 24 to 72 hours after casting. Coordinate with form work construction, concrete placement schedule, and form work removal to ensure that surfaces are blasted at same age for uniform results.

PART 2 EXECUTION

2.01 PATCH FINISHING

A. Repair surface defects immediately after form removal.

B. Make any patches in concrete to closely match color and texture of surrounding surfaces. Determine mix formula for patching mortar by trial and obtain a good color match with concrete when both patch and concrete are cured and dry.

1. Mix white and gray Portland cement as required to match surrounding concrete to produce grout having consistency of thick paint.

2. Use a minimum amount of mixing water.

3. Mix patching mortar in advance and allow to stand without frequent manipulation, without addition of water, until it has reached stiffest placeable consistency.

4. After initial set, dress surfaces of patches manually to obtain same texture as surrounding surfaces.

C. Repair defective areas.

1. Remove honeycomb and defective concrete down to sound concrete.

2. Make edges perpendicular to surface or slightly undercut.

3. Featheredges are not permitted.

4. Dampen area to be patched and at least 6" surrounding it to prevent absorption of patching mortar water.

5. Prepare bonding grout.

6. Mix to consistency of thick cream.

7. Brush into surface.

D. After surface water has evaporated from patch area, brush bond coat into surface.

1. When bond coat begins to lose water sheen, apply patching mortar.

2. Thoroughly consolidate mortar into place and strike-off to leave patch slightly higher than surrounding surface.

3. Leave undisturbed for at least 1 hour before final finish.

4. Keep patched area damp for 72 hours or apply curing compound.

5. Do not use metal tools in finishing an exposed patch.

E. Tie Holes: Unless indicated otherwise, after being cleaned and thoroughly dampened, fill the hole solid with patching mortar.

F. Whereas-cast finishes are indicated, total patched area may not exceed 1 in 500 of as-cast surface. This is in addition to form tie patches, if ties are permitted to fall within as-cast areas.

G. In any finishing process which is intended to expose aggregate on surface, patched areas must show aggregate.

1. Outer 1" of patch shall contain same aggregates as surrounding concrete.

2. For aggregate transfer finish, patching mixture shall contain same selected colored aggregates.

3. After curing, expose aggregates together with aggregates of adjoining surfaces by same process.

2.02 SLAB FINISHING

A. Broom or Belt Finish: After concrete has been placed, consolidated, struck-off, and leveled to the required tolerance, roughen surface transversely with stiff brushes, rakes, or burlap belt before final set.

B. Float Finish: After concrete has been placed, consolidated, struck-off, and leveled, do not work further until ready for floating.

1. Begin floating when water sheen has disappeared and surface has stiffness sufficient to permit operation.

2. During or after first floating, check plainness of entire surface with a 10 feet long straightedge applied at 2 or more different angles.

3. Cut down high spots and fill low spots to the required tolerance.

4. Refloat slab immediately to a uniform sandy texture.

C. Trowel Finish:

1. Float finish surface.

2. Power trowel.

3. Hand trowel as required to provide surface. Do not apply water to retemper concrete in finishing operations.

4. First troweling after power floating shall produce smooth surface relatively free of defects but which may still show some trowel marks.

5. Second trowel by hand after surfaces has hardened.

6. Leave finished surface essentially free of trowel marks, uniform in texture and appearance.

7. On surfaces intended to support floor coverings, grind off defects which would show through floor covering.

2.03 AS-CAST FORMED FINISHING

A. Rough: Patch defects, chip or rub off fins exceeding 1/4" height.

B. Smooth: Patch tie holes and defects and remove fins completely.

1. When surface texture is impaired and form joints misaligned, grind, bush hammer, or correct affected concrete as directed by Engineer.

2. Slurry grout areas evidencing minor mortar leakage to match adjacent concrete.

3. Repair major mortar leakage as a defective area.

4. When in opinion of Engineer, workmanship is less than acceptable standard, provide one of rubbed finishes at no additional cost to Owner.

2.04 RUBBED FINISHING

A. Produce following finishes on concrete with a smooth form finish.

1. Smooth Rubbed: Remove forms and perform necessary patching as soon after placement as possible.

2. Finish newly hardened concrete no later than 24 hours following form removal.

3. Wet surfaces and rub with carborundum brick or other abrasive until uniform color and texture are produced.

B. Grout Cleaned: Undertake no cleaning operations until all contiguous surfaces are completed and accessible.

1. Wet surface of concrete sufficiently to prevent absorption of water from grout.

2. Apply grout uniformly.

3. Immediately after grouting, scrub surface with cork float or stone to coat surface and fill voids.

4. While grout is still plastic, remove excess grout by working surface with rubber float or sack.

5. After-surface whitens from drying, rub vigorously with clean burlap.

6. Keep damp for at least 36 hours after final rubbing.

7. Cork Floated: Remove forms within 2 to 3 days of placement where possible.

8. Remove ties.

9. Remove all burrs and fins.

10. Dampen wall surface.

11. Apply mortar with firm rubber float or with trowel, filling all surface voids.

12. Compress mortar into voids.

13. If mortar surface dries too rapidly to permit proper compaction and finishing, apply a small amount of water with fog sprayer.

14. Produce final texture with cork float using a swirling motion.

2.05 UNFORMED FINISHING

A. After concrete is placed, strike smooth, tops of walls or buttresses, horizontal offsets, and similar unformed surfaces occurring adjacent to formed surfaces.

B. Float to texture which is reasonably consistent with formed surfaces.

C. Continue final treatment on formed surfaces uniformly across uniformed surfaces.

END OF SECTION

SECTION 16530

RESIDENTIAL STREET LIGHTING

PART 1 GENERAL

1.01 SECTION INCLUDES

A. Exterior lighting and accessories.

B. Poles.

1.02 RELATED SECTIONS

A. Section 03310 – Concrete work.

1.03 REFERENCES

A. ANSI C136.2 (Most current), American National Standard for Roadway and Area Lighting.

B. IES RP-8 – Recommended Practices for Roadway Lighting.

C. NFPA 70-National Electrical Code.

1.04 SUBMITTALS FOR REVIEW

A. Shop drawings for prior approval: Indicated dimensions and components for each light that is not a standard product outlined in this document.

1.05 COORDINATION

A. Coordinate with electrical contractor.

B. Coordination with Heber Light and Power.

C. Furnish bolt templates and pole mounting accessories to installer / contractor of pole foundations.

PART 2 APPROVED PRODUCTS

2.01 MANUFACTURES

A. Hadco – Comfort Optics Hagerstown

2.02 FIXTURE REQUIREMENTS

A. Residential Model: C15035A

B. Light Output. 4,390 lumens, 52 watts on FAWS setting 10. Contractor to install on FAWS setting (Midway to decide this)

C. Color Temperature: 30K = 3000K CCT

D. Voltage: AS = Auto-Sensing Voltage (120 volt thru 277 volt)

E. Housing: M = Modern Style Swing Open Design.

F. Housing Colors: BK = Black

G. Optics: L3 = IES Type III Asymmetric

H. Finial: A = Spike

I. Control Options: RCD7 = Dimming PC Receptacle – 7 Pin

J. Prewired Lead: L25 = 25 feet prewired leads factory pre-wired to fixture terminal block

K. Control Options: = Long Life Twistlock Photocontrol For Solid State 20 year rating. 10 year warranty.

L. Luminaire shall be warranted to be free from manufacturing defects for a period of 10 years. Contact factory for complete statement of limited warranty

M. Mounting Condition: Concrete base with J bolts.

N. Pole: As required in this schedule.

2.03 POLES

A. Pole: HADCO, CP15035A

B. Height: 14 feet

C. Shaft Style: F5J 5” inch diameter Fluted, .188 Minimum Wall

D. Material: Aluminum or Concrete, non-direct burial type

E. Color/Finish: Powder Coat Paint Finish, Black

F. Shape: Fluted with 3’ 3/4” high decorative bottom piece

G. Base: 13” inch Square Base, Base Weight 60, Base EPA 3.7880625 with 14” square bolt circle.

H. Loading Capacity Ratings:

1. 100 Pounds.

2. Steady Wind: 90 MPH minimum.

2.04 CONDUIT

A. One inch PVC scheduled 90 electrical (gray) conduit.

PART 3 EXECUTION

3.01 INSTALLATION

A. All concrete shall be a minimum of 4 foot below finished grade.

B. Install poles plumb. Provide shims and double nuts to adjust to plumb.

C. Install conduit at a minimum burial depth of 24” from the secondary J-box or transformer secondary compartment, as appropriate, to the street light mounting base for each street light location.

3.02 FIELD QUALITY CONTROL

A. Operate each light after installation and connection. Inspect for proper connections and operation.

B. Test photo-electric for cell operation.

3.03 ADJUSTING

A. Adjust light to provide illumination levels and distribution as directed.

B. Adjust photo-electric cell to operate correctly.

3.04 CLEANING

A. Clean electrical parts to remove conductive and deleterious materials.

B. Remove dirt and debris from enclosure.

C. Clean photo-cell surface as recommended by the manufacturer.

D. Clean finish and touch up damage.

3.05 PROTECTION OF FINISHED WORK

A. The installer should initially test the operation of the fixture and photocell upon installation. After the fixture installation, plug the photocell into the fixture photocell receptacle, cover the photocell window with duct tape. The fixture should energize.

3.06 LIGHTING LOCATION

A. Install bases for lighting poles at each intersections and at the end of each cul-de-sac's, or as shown on the plans.

B. Residential street lights are to be installed in the center of the park-strip or one-foot behind the sidewalk, or as directed by the City Engineer

END OF SECTION

STANDARD DRAWINGS
TABLE OF CONTENTS

Drawing No.	Last Rev.	Drawing Name
Fence -1	01/20	Residential Fence
Storm Drain-1	01/20	Curb Drop Inlet Box
Storm Drain-2	01/20	Grate and Frame
Storm Drain-3	01/20	Sump Disposal
Storm Drain-4	01/20	Curb Inlet Box-Open Face
Streets-1	01/20	Street Cross-Section & Utility Locations – Commercial/Local Street
Streets-2	01/20	Street Cross-Sections & Utility Locations – Local Street
Streets-3	01/20	Street Cross-Sections - Flat Curb – Local Street
Streets-4	01/20	Street Cross-Sections – Local, Minor Collector, Collector
Streets-5	01/20	Asphalt Trails and Sidewalks
Streets-6	01/20	Curbs and Gutters
Streets-7	01/20	Corner Pedestrian Ramp
Streets-8	01/20	Mid-Block Pedestrian Ramps
Streets-9	01/20	Residential Driveway Approach
Streets-10	01/20	Commercial Driveway Approach
Streets-11	01/20	Cul-De-Sac Plans
Streets-12	01/20	Street Sign
Streets-13	01/20	Street Monument
Streets-14	01/20	Residential Roundabout
Streets-15	01/20	Residential Street Lighting
Utility-1	01/20	Utility Installation in Existing Roadways
Utility-2	01/20	Standard Street Intersection and Utility Location
Utility-3	01/20	Lateral and Utility Location
Utility-4	01/20	Concrete Collar
Utility-5	01/20	Utility Installation Outside of Roadway
Water-1	01/20	Standard Fire Hydrant
Water-2	01/20	Typical Pipe Thrust Blocking
Water-3	01/20	Valve Box Collar
Water-4	01/20	Tracer Wire Installation
Water-5	01/20	Water Service Connection
Water-6	01/20	1 1/2” and 2” Water Service Connection
Water-7	01/20	Air/Vac Release Station
Water-8	01/20	Temporary Flush Valve

Midway Irrigation Company Details

Irrigation-1	01/20	Single Irrigation Service Connection
Irrigation-2	01/20	Double Irrigation Service Connection
Irrigation-3	01/20	1 1/2” and 2” Irrigation Service Connection

LOCATION AND HEIGHT

F1 TYP RESIDENTIAL FENCE

N.T.S.

HORROCKS ENGINEERS

DATE: JANUARY 2020

HORROCKS ENGINGEERS
728 WEST 100 SOUTH #2
HEBER CITY, UTAH 84032
(435) 654-2226

MIDWAY CITY
75 NORTH 100 WEST
PO BOX 277
MIDWAY, UTAH 84049
(435) 654-3223

MIDWAY CITY STANDARD DRAWING

FENCE - 1

H:\Midway City\Standard Drawings\2020 Standards\DRAWINGS\FENCES-1.dwg - 85x11 - 1/28/2020 09:52am, natalier

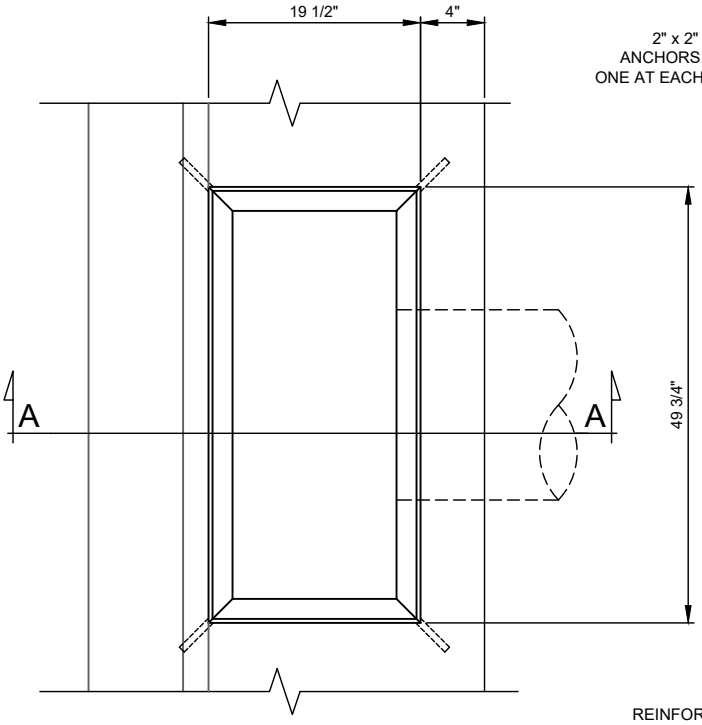

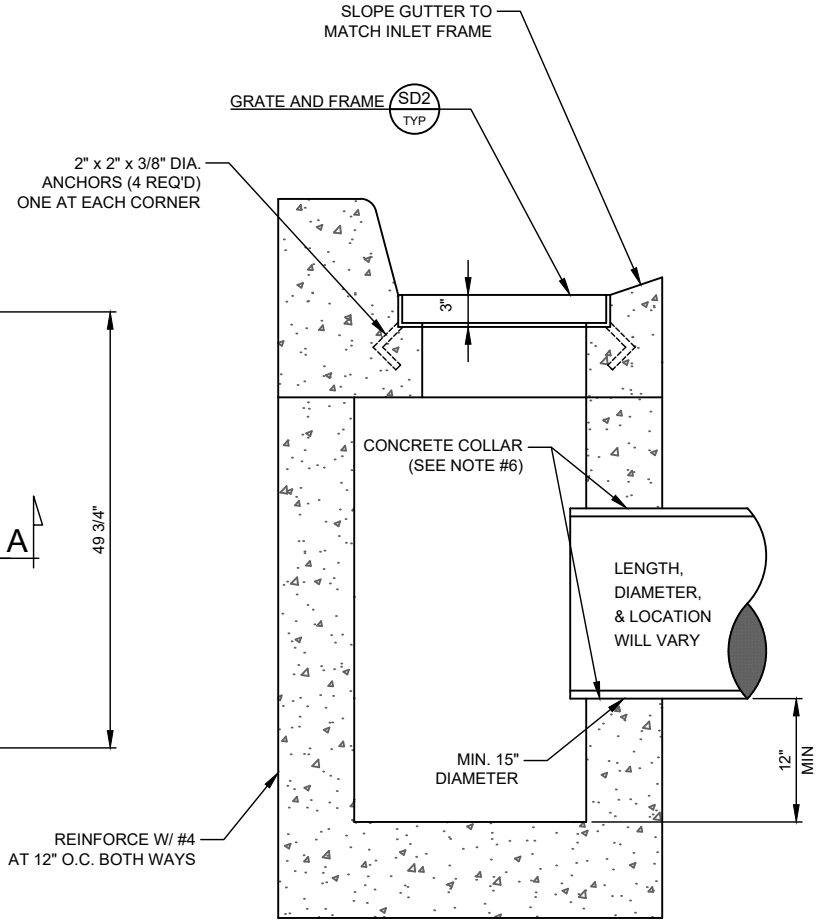

SECTION A-A

NOTES:

1. ALL FRAMES & GRATES TO BE CAST IRON .
2. CONSTRUCT BOX (WALL THICKNESS) TO MATCH EXISTING OR NEW TYPE OF CURB AS SHOWN.
3. INLET BOX SPACING SHALL NOT EXCEED 500 FEET UNLESS APPROVED BY THE CITY ENGINEER.
4. A SNOUT OR APPROVED EQUAL SHALL BE USED WHERE THE STORM WATER IS LEAVING THE STORM WATER SYSTEM AND ENTERING A SUMP, RETENTION / DETENTION POND, OR DISCHARGE POINT.
5. IF SNOUT IS INSTALLED, SUMP DEPTH SHALL BE 36" FOR OUTLET DIA. 12" AND SMALLER. FOR OUTLET DIA. 15" AND LARGER, SUMP DEPTH SHALL EQUAL 2.5 TO 3.0 TIMES THE DIA. OF THE OUTLET PIPE.
6. CONCRETE COLLARS ARE REQUIRED AT ALL STORM DRAIN PIPE CONNECTIONS TO MANHOLES OR INLETS. THE CONCRETE COLLAR SHALL SEAL THE STORM DRAIN PIPE TO MANHOLE OR INLET.
7. ALL MANHOLES, CATCH BASINS, VALVE BOXES AND VERTICAL STRUCTURES SHALL BE COMPACTED USING A JUMPING JACK TYPE DEVICE WITH MAXIMUM LIFTS NOT TO EXCEED 6 INCHES OR AS RECOMMENDED BY JUMPING JACK MANUFACTURES. DENSITY TESTS SHALL BE TAKEN AT EVERY MANHOLE, CATCH BASIN, VALVE BOX AND VERTICAL STRUCTURES.

SD1 TYP CURB DROP INLET BOX

N.T.S.

HORROCKS ENGINEERS

DATE: JANUARY 2020

HORROCKS ENGINGEERS
728 WEST 100 SOUTH #2
HEBER CITY, UTAH 84032
(435) 654-2226

MIDWAY CITY
75 NORTH 100 WEST
PO BOX 277
MIDWAY, UTAH 84049
(435) 654-3223

MIDWAY CITY
STANDARD DRAWING

STORM DRAIN - 1

H:\Midway City\Standard Drawings\2020 Standards\DRAWINGS\STORM DRAIN-1.dwg - Layout1 - 1/28/2020 09:52am, natalie

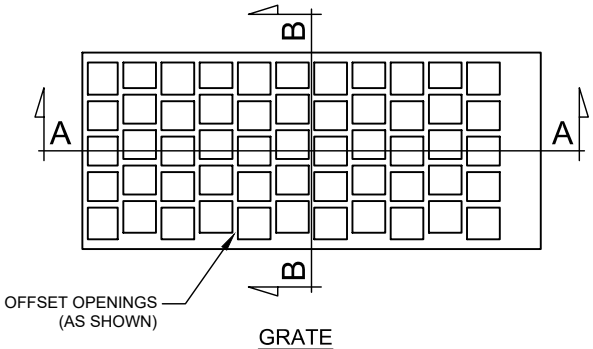

GRATE

WEIGHT: 266 LBS.

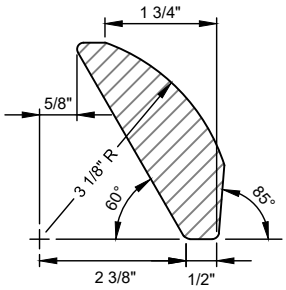

DETAIL "A"

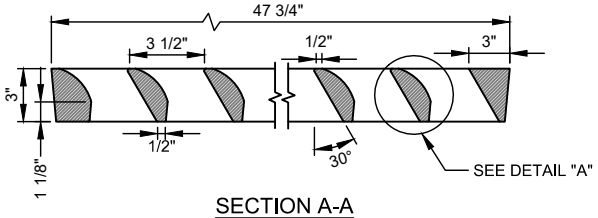

SECTION A-A

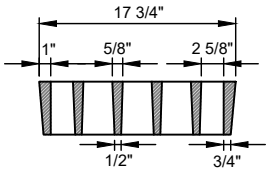

SECTION B-B

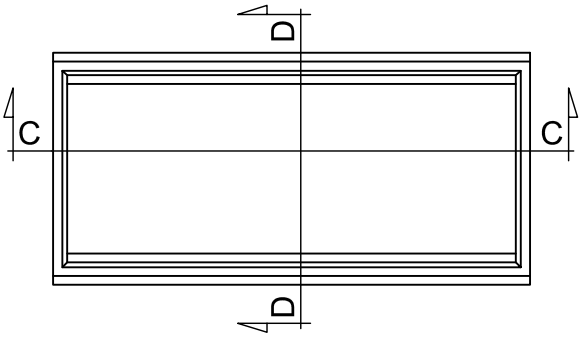

FRAME

WEIGHT: 160 LBS.

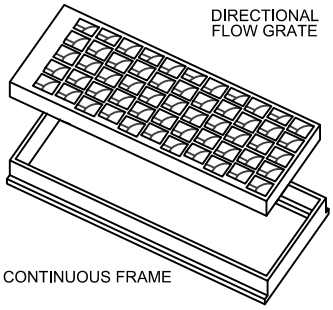

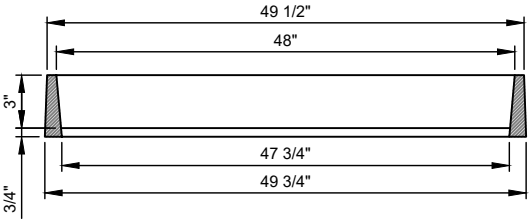

SECTION C-C

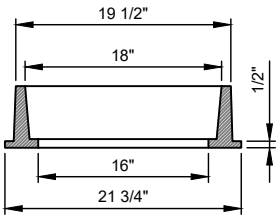

SECTION D-D

NOTES:

1. ALL DIMENSIONS ARE INCHES (in) UNLESS OTHERWISE NOTED.
2. GRATE AND FRAME MAY BE FURNISHED IN EITHER DUCTILE IRON (ASTM A-536 GRADE 60) OR CAST GRAY IRON: AASHTO M-105, CLASS 30 B (ASTM A-48).
3. GRATE & FRAME SHALL BE D&L I-1803 OR APPROVED EQUAL.

DESIGN DATA:

MS 18 (HS-20) OR INTERSTATE ALTERNATE LOADING IN ACCORDANCE WITH CURRENT AASHTO AND INTERIM SPECIFICATIONS.

DUCTILE IRON AND STRUCTURAL STEEL:
fs=138 MPa

SD2 TYP — GRATE AND FRAME
N.T.S.

HORROCKS ENGINEERS

DATE: JANUARY 2020

HORROCKS ENGINGEERS
728 WEST 100 SOUTH #2
HEBER CITY, UTAH 84032
(435) 654-2226

MIDWAY CITY
75 NORTH 100 WEST
PO BOX 277
MIDWAY, UTAH 84049
(435) 654-3223

MIDWAY CITY STANDARD DRAWING

STORM DRAIN - 2

H:\Midway City\Standard Drawings\2020 Standards\DRAWINGS\STORM DRAIN-2.dwg - Layout1 - 1/28/2020 09:52am, natalie

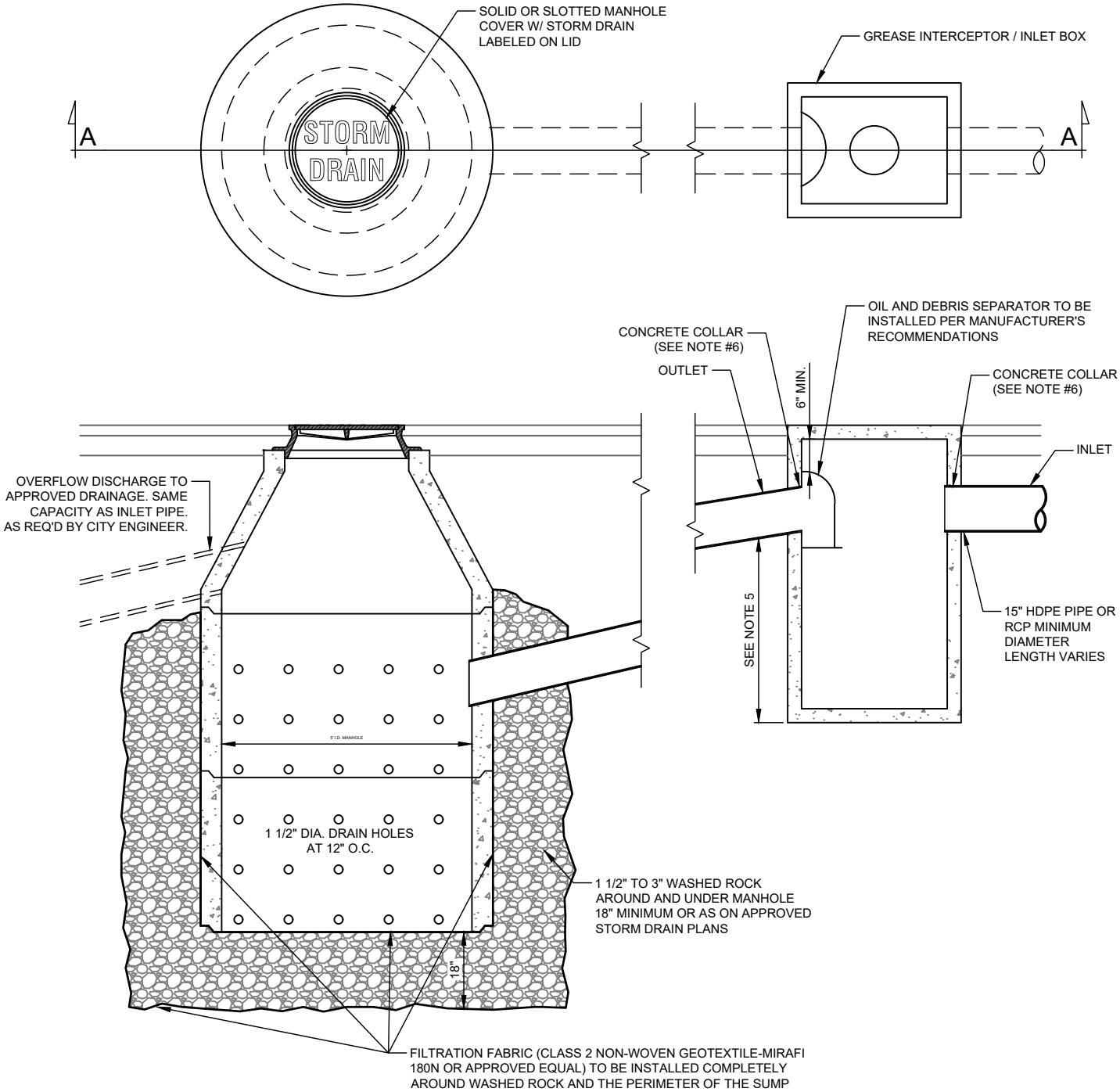

SECTION A-A

NOTES:

1. CONSTRUCT DROP INLET BOX TO MATCH WIDTH OF CURB & GUTTER. MATCH INSIDE OF BOX TO INSIDE OF FRAME.
2. D & L I-3516 WITH ADJUSTABLE CURB BOX.
3. STANDARD CAST IRON MANHOLE RING & LID.
4. OIL SEPARATOR TO BE INSTALLED PRIOR TO SUMP.
5. INLET BOX DEPTH SHALL BE 36" FOR OUTLET DIA. 12" AND SMALLER. FOR OUTLET DIA. 15" AND LARGER, SUMP DEPTH SHALL EQUAL 2.5 TO 3.0 TIMES THE DIA. OF THE OUTLET PIPE.
6. CONCRETE COLLARS ARE REQUIRED AT ALL STORM DRAIN PIPE CONNECTIONS TO MANHOLES OR INLETS. THE CONCRETE COLLAR SHALL SEAL THE STORM DRAIN PIPE TO MANHOLE OR INLET.

SD3 TYP — SUMP DISPOSAL
N.T.S.

HORROCKS ENGINEERS

DATE: JANUARY 2020

HORROCKS ENGINGEERS
728 WEST 100 SOUTH #2
HEBER CITY, UTAH 84032
(435) 654-2226

MIDWAY CITY
75 NORTH 100 WEST
PO BOX 277
MIDWAY, UTAH 84049
(435) 654-3223

MIDWAY CITY STANDARD DRAWING

STORM DRAIN - 3

H:\Midway City\Standard Drawings\2020 Standards\DRAWINGS\STORM DRAIN-3.dwg - 85x11 - 1/28/2020 09:52am, natalier

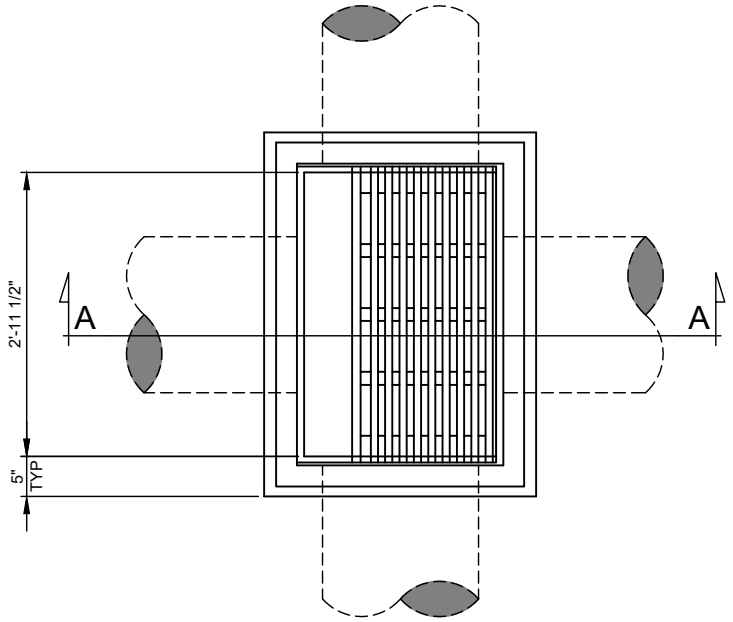

PLAN

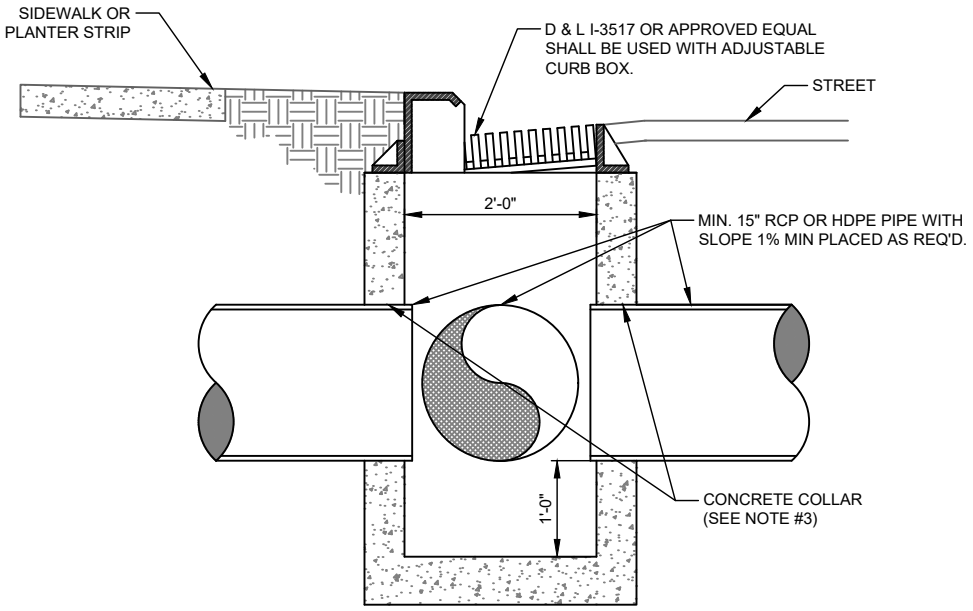

SECTION A-A

NOTES:

1. #4 REBAR SPACED NO GREATER THAN 12" O.C. HORIZONTAL AND 8" O.C. VERTICAL. 14" OVERLAP OF REBAR REQUIRED.
2. OPEN FACE CATCH BASIN TO BE USED ONLY AT THE CITY ENGINEER'S DISCRETION.
3. CONCRETE COLLARS ARE REQUIRED AT ALL STORM DRAIN PIPE CONNECTIONS TO MANHOLES OR INLETS. THE CONCRETE COLLAR SHALL SEAL THE STORM DRAIN PIPE TO MANHOLE OR INLET.
4. ALL MANHOLES, CATCH BASINS, VALVE BOXES AND VERTICAL STRUCTURES SHALL BE COMPACTED USING A JUMPING JACK TYPE DEVICE WITH MAXIMUM LIFTS NOT TO EXCEED 6 INCHES OR AS RECOMMENDED BY JUMPING JACK MANUFACTURES. DENSITY TESTS SHALL BE TAKEN AT EVERY MANHOLE, CATCH BASIN, VALVE BOX AND VERTICAL STRUCTURES.

SD4 / TYP — CURB INLET BOX-OPEN FACE

N.T.S.

HORROCKS ENGINEERS

DATE: JANUARY 2020

HORROCKS ENGINGEERS
728 WEST 100 SOUTH #2
HEBER CITY, UTAH 84032
(435) 654-2226

MIDWAY CITY
75 NORTH 100 WEST
PO BOX 277
MIDWAY, UTAH 84049
(435) 654-3223

MIDWAY CITY
STANDARD DRAWING

STORM DRAIN - 4

H:\Midway City\Standard Drawings\2020 Standards\DRAWINGS\STORM DRAIN-4.dwg - Layout1 - 1/28/2020 09:52am, natalier

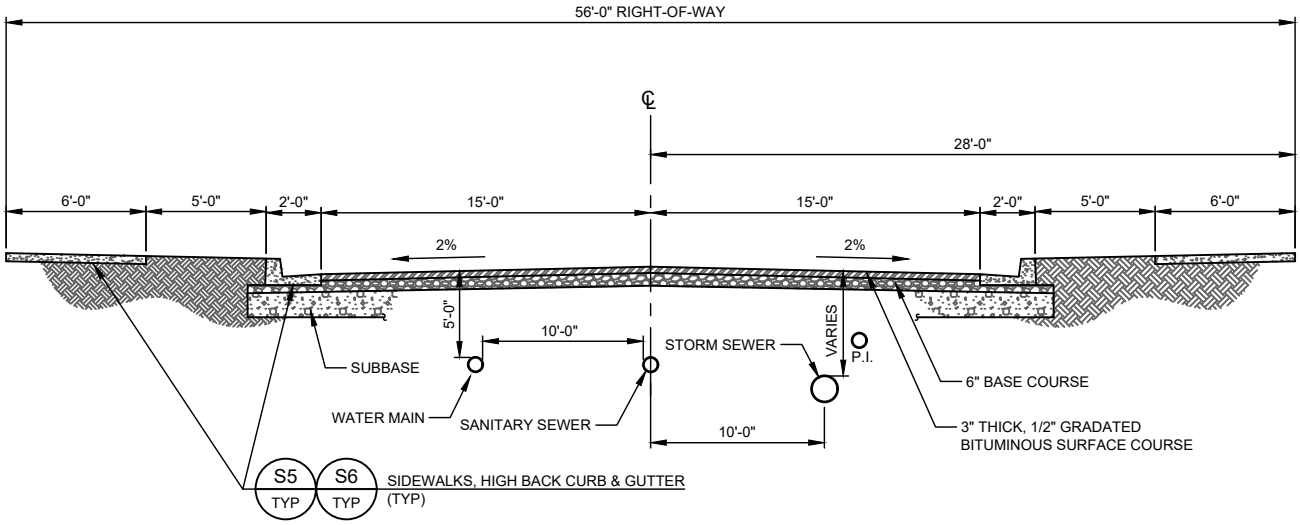

NOTES:
1. WHEREVER POSSIBLE, SANITARY SEWER SHALL BE INSTALLED ON THE DOWNHILL SIDE OF THE STREET.
2. NO WATER LINE SMALLER THAN 8-INCH DIAMETER SHALL BE INSTALLED.
3. IMPORT/ GRANULAR FILL, A-1-a GRADATED SUBBASE MAY BE REQUIRED WHEN EXISTING SUBBASE IS DETERMINED BY THE CITY ENGINEER TO BE UNSUITABLE AND SHALL BE IN ACCORDANCE WITH SECTION 02250.
4. SUGGESTED UTILITY PLACEMENT; FINAL PLACEMENT TO BE APPROVED BY CITY ENGINEER.

LOCAL STREET CROSS SECTION #1
COMMERCIAL & BUSINESS

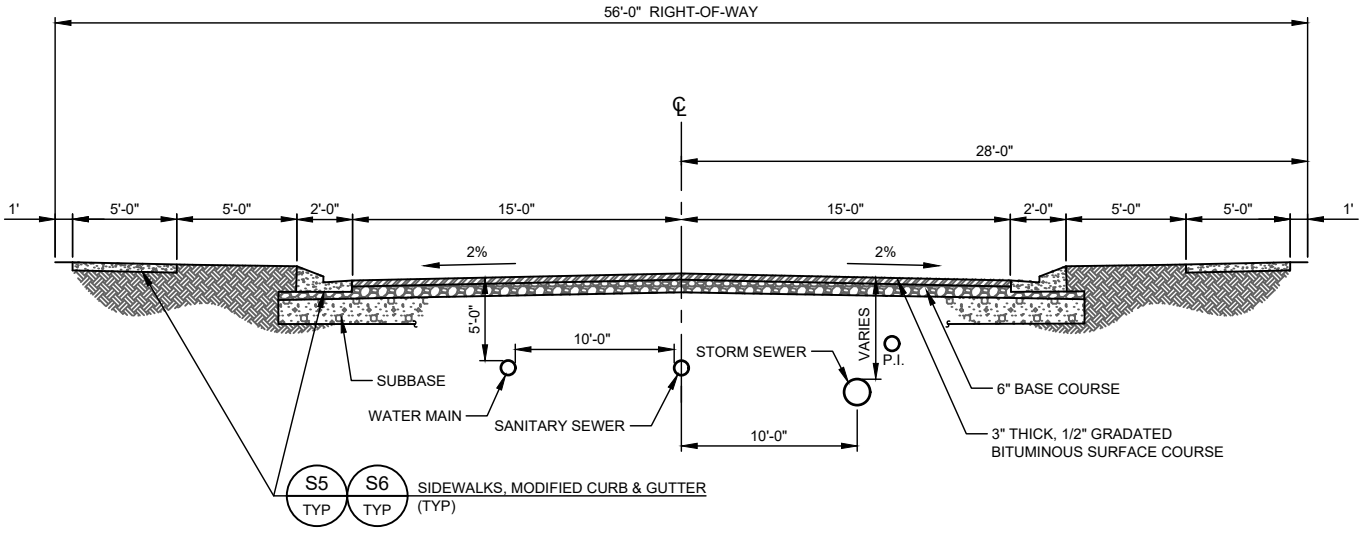

NOTES:
1. WHEREVER POSSIBLE, SANITARY SEWER SHALL BE INSTALLED ON THE DOWNHILL SIDE OF THE STREET.
2. NO WATER LINE SMALLER THAN 8-INCH DIAMETER SHALL BE INSTALLED.
3. IMPORT/ GRANULAR FILL, A-1-a GRADATED SUBBASE MAY BE REQUIRED WHEN EXISTING SUBBASE IS DETERMINED BY THE CITY ENGINEER TO BE UNSUITABLE AND SHALL BE IN ACCORDANCE WITH SECTION 02250.
4. SUGGESTED UTILITY PLACEMENT; FINAL PLACEMENT TO BE APPROVED BY CITY ENGINEER.

LOCAL STREET CROSS SECTION #2

S1 / TYP — STREET CROSS-SECTIONS AND UTILITY LOCATIONS
DETAIL INFO

HORROCKS ENGINEERS

DATE: JANUARY 2020

HORROCKS ENGINGEERS
728 WEST 100 SOUTH #2
HEBER CITY, UTAH 84032
(435) 654-2226

MIDWAY CITY
75 NORTH 100 WEST
PO BOX 277
MIDWAY, UTAH 84049
(435) 654-3223

MIDWAY CITY STANDARD DRAWING

STREETS - 1

H:\Midway City\Standard Drawings\2020 Standards\DRAWINGS\STREETS-1.dwg - 85x11 - 1/28/2020 09:52am, natalier

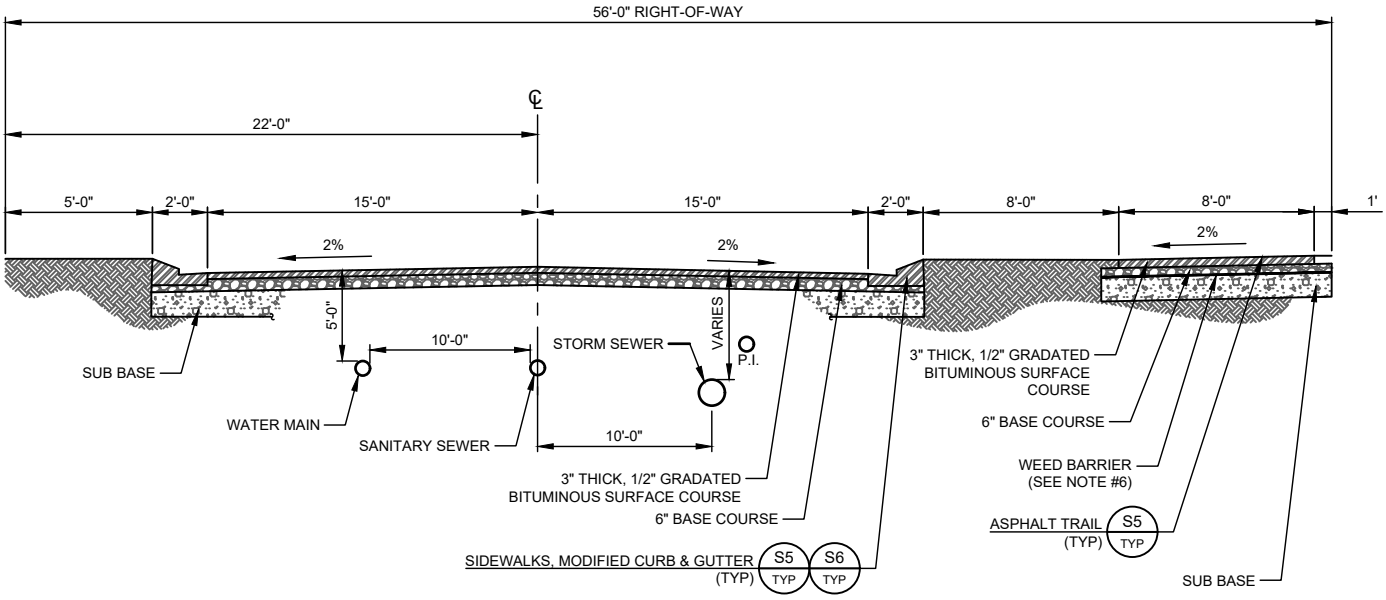

NOTES:

1. THIS CROSS SECTION MAY BE USED ONLY AFTER APPROVAL BY PLANNING COMMISSION & CITY COUNCIL.
2. WHEREVER POSSIBLE, SANITARY SEWER SHALL BE INSTALLED ON THE DOWNHILL SIDE OF THE STREET.
3. NO WATER LINE SMALLER THAN 8-INCH DIA. SHALL BE INSTALLED.
4. IMPORT/ GRANULAR FILL, A-1-a GRADATED SUBBASE MAY BE REQUIRED WHEN EXISTING SUBBASE IS DETERMINED BY THE CITY ENGINEER TO BE UNSUITABLE AND SHALL BE IN ACCORDANCE WITH SECTION 02250.
5. SUGGESTED UTILITY PLACEMENT; FINAL PLACEMENT TO BE APPROVED BY CITY ENGINEER.
6. FURNISH WOVEN, NEEDLE-PUNCHED, POLY PROPYLENE, 5.0 OZ, WEED BARRIER GEOTEXTILE DESIGNED FOR COMMERCIAL USE. WEED BARRIER TO BE INSTALLED UNDER 6" BASE COURSE.

LOCAL STREET CROSS SECTION #3

S2 / TYP

STREET CROSS-SECTIONS AND UTILITY LOCATIONS

N.T.S.

HORROCKS ENGINEERS

DATE: JANUARY 2020

HORROCKS ENGINGEERS
728 WEST 100 SOUTH #2
HEBER CITY, UTAH 84032
(435) 654-2226

MIDWAY CITY
75 NORTH 100 WEST
PO BOX 277
MIDWAY, UTAH 84049
(435) 654-3223

MIDWAY CITY STANDARD DRAWING

STREETS - 2

H:\Midway City\Standard Drawings\2020 Standards\DRAWINGS\STREETS-2.dwg - 85x11 - 1/28/2020 09:52am, natalier

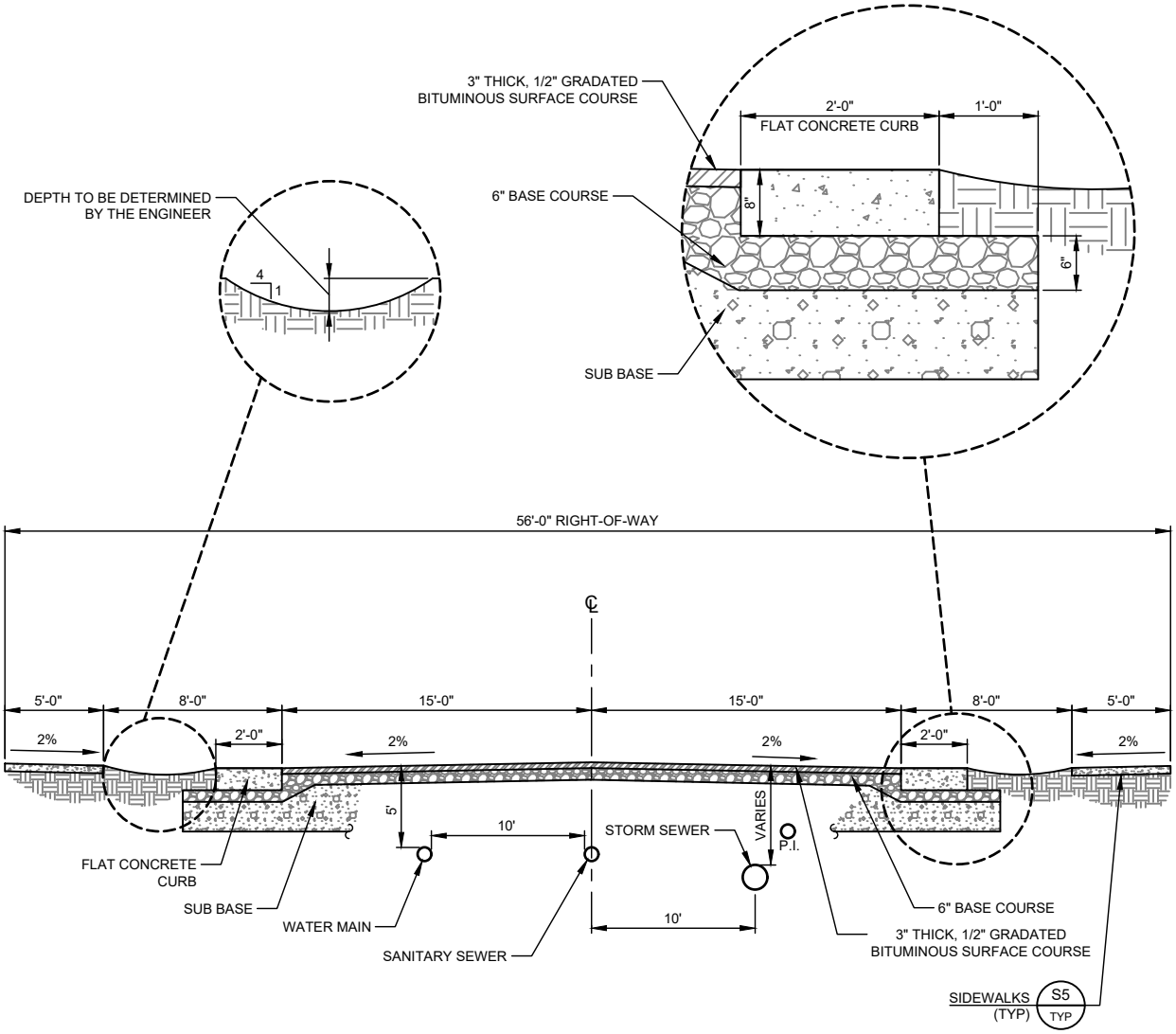

NOTES:

1. THIS CROSS SECTION MAY BE USED WHEN THERE IS AN AVERAGE FRONTAGE OF 150' PER LOT (CORNER LOTS BOTH FRONTAGES MUST BE CALCULATED) AND ONLY AFTER APPROVAL BY PLANNING COMMISSION & CITY COUNCIL.
2. WHEREVER POSSIBLE, SANITARY SEWER SHALL BE INSTALLED ON THE DOWNHILL SIDE OF THE STREET.
3. NO WATER LINE SMALLER THAN 8-INCH DIA. SHALL BE INSTALLED.
4. IMPORT/ GRANULAR FILL, A-1-a GRADATED SUBBASE MAY BE REQUIRED WHEN EXISTING SUBBASE IS DETERMINED BY THE CITY ENGINEER TO BE UNSUITABLE AND SHALL BE IN ACCORDANCE WITH SECTION 02250.
5. SUGGESTED UTILITY PLACEMENT; FINAL PLACEMENT TO BE APPROVED BY CITY ENGINEER.
6. STORM WATER FLOW TO CONTINUE THROUGH THE DRIVEWAY CONNECTION.

LOCAL STREET CROSS SECTION #4

S3 TYP

STREET CROSS-SECTIONS AND UTILITY LOCATIONS

N.T.S.

HORROCKS ENGINEERS

DATE: JANUARY 2020

HORROCKS ENGINGEERS
728 WEST 100 SOUTH #2
HEBER CITY, UTAH 84032
(435) 654-2226

MIDWAY CITY
75 NORTH 100 WEST
PO BOX 277
MIDWAY, UTAH 84049
(435) 654-3223

MIDWAY CITY STANDARD DRAWING

STREETS - 3

H:\Midway City\Standard Drawings\2020 Standards\DRAWINGS\STREETS-3.dwg - Layout1 - 1/28/2020 09:52am, nataller

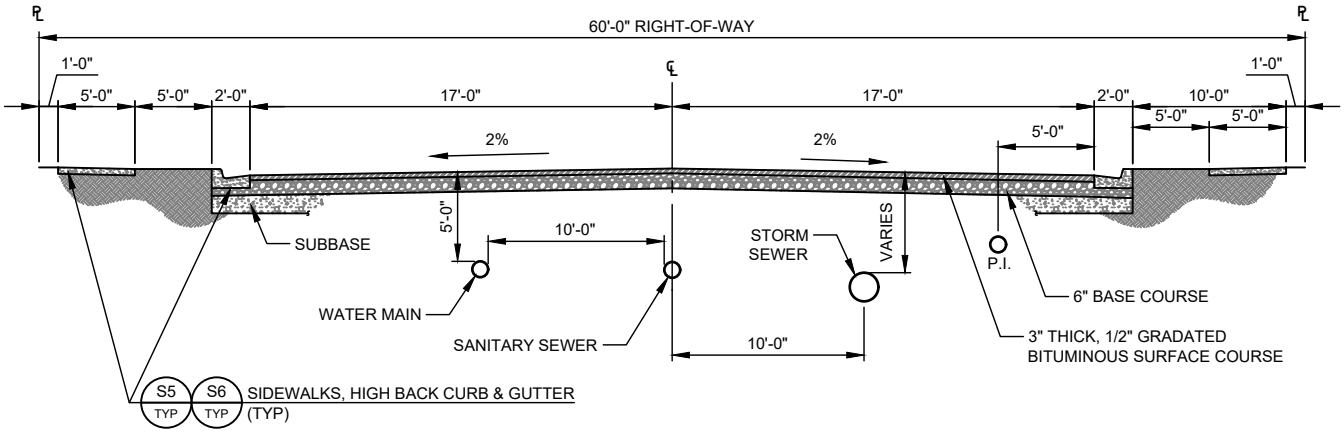

LOCAL COLLECTOR STREET

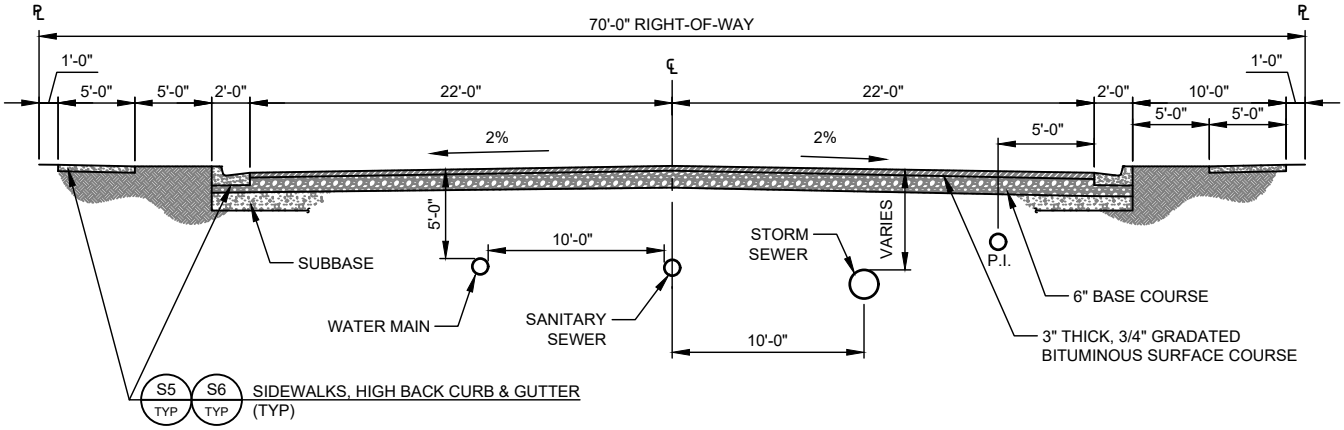

MINOR COLLECTOR STREET

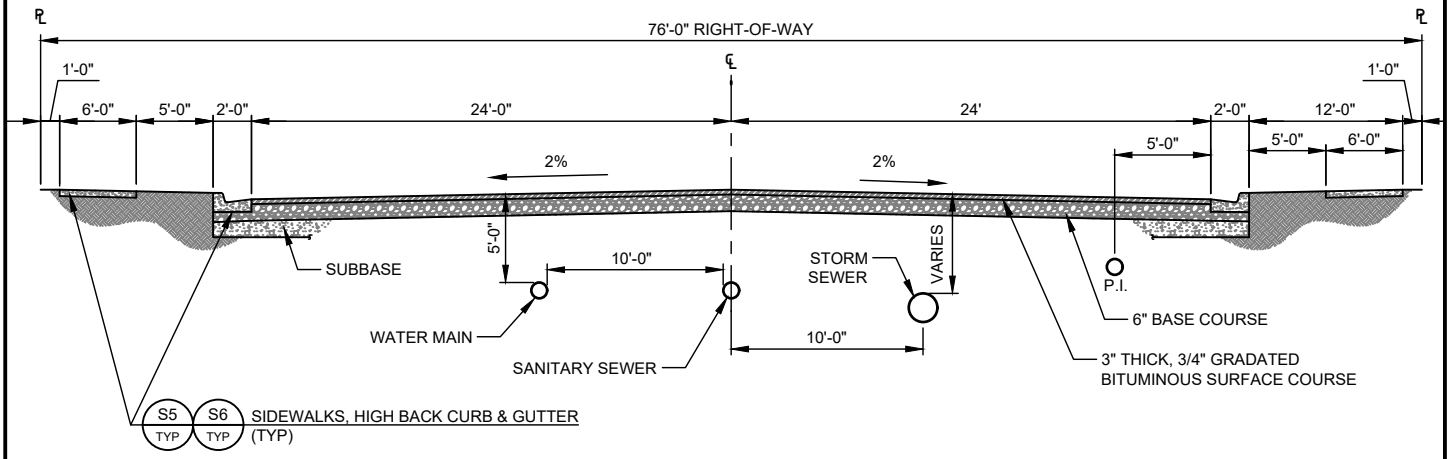

COLLECTOR STREET

NOTES:
1. STREET CROSS SECTION MAY BE MODIFIED BY CITY ENGINEER AND CITY COUNCIL.
2. CITY ENGINEER SHALL DETERMINE IF HIGH BACK OR MODIFIED CURB IS USED.
3. CITY COUNCIL MAY REMOVE CURB & GUTTER ON LOCAL COLLECTOR STREET.
4. WHEREVER POSSIBLE, SANITARY SEWER SHALL BE INSTALLED ON THE DOWNHILL SIDE OF THE STREET.
5. NO WATER LINE SMALLER THAN 8-INCH DIAMETER SHALL BE INSTALLED.
6. IMPORT/ GRANULAR FILL, A-1-a GRADATED SUBBASE MAY BE REQUIRED WHEN EXISTING SUBBASE IS DETERMINED BY THE CITY ENGINEER TO BE UNSUITABLE AND SHALL BE IN ACCORDANCE WITH SECTION 02250.
7. SUGGESTED UTILITY PLACEMENT; FINAL PLACEMENT TO BE APPROVED BY CITY ENGINEER.

S4 TYP

STREET CROSS-SECTIONS AND UTILITY LOCATIONS

N.T.S.

HORROCKS ENGINEERS

DATE: JANUARY 2020

HORROCKS ENGINGEERS
728 WEST 100 SOUTH #2
HEBER CITY, UTAH 84032
(435) 654-2226

MIDWAY CITY
75 NORTH 100 WEST
PO BOX 277
MIDWAY, UTAH 84049
(435) 654-3223

MIDWAY CITY STANDARD DRAWING

STREETS - 4

H:\Midway City\Standard Drawings\2020 Standards\DRAWINGS\STREETS-4.dwg - Layout1 - 1/28/2020 09:53am, nataller

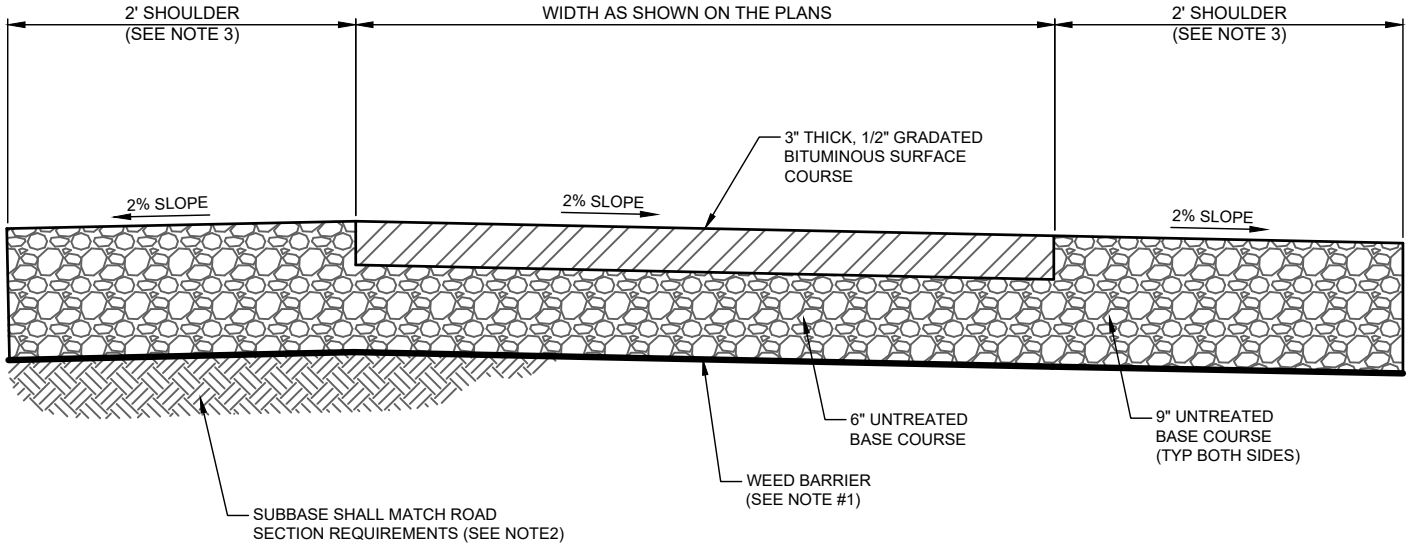

ASPHALT TRAILS

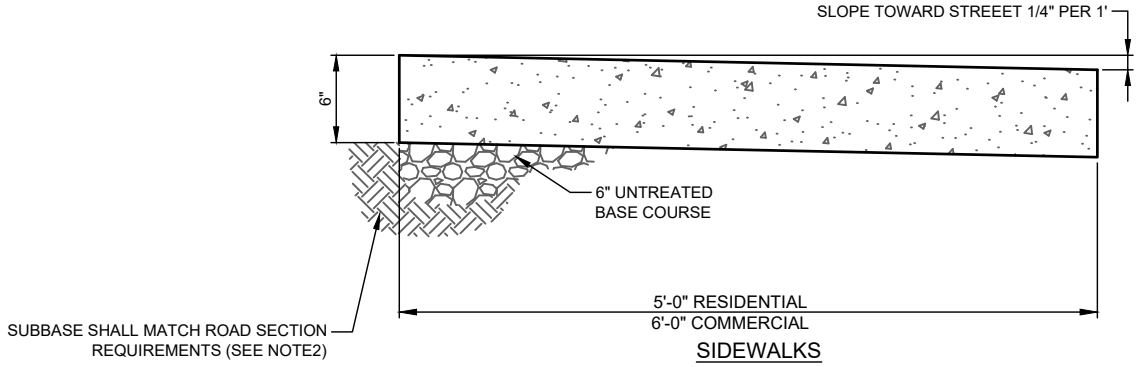

SIDEWALKS

NOTE:

1. FURNISH WOVEN, NEEDLE-PUNCHED, POLYPROPYLENE, 5.0 oz., WEED BARRIER GEOTEXTILE DESIGNED FOR COMMERCIAL USE
2. IMPORT/ GRANULAR FILL, A-1-a GRADATED SUBBASE MAY BE REQUIRED WHEN EXISTING SUBBASE IS DETERMINED BY THE CITY ENGINEER TO BE UNSUITABLE AND SHALL BE IN ACCORDANCE WITH SECTION 02528.
3. SHOULDERS ALONG ASPHALT TRAILS MAY BE ADJUSTED WHEN APPROVED BY CITY ENGINEER.

S5 TYP — ASPHALT TRAILS AND SIDEWALKS

N.T.S.

HORROCKS ENGINEERS

DATE: JANUARY 2020

HORROCKS ENGINGEERS
728 WEST 100 SOUTH #2
HEBER CITY, UTAH 84032
(435) 654-2226

MIDWAY CITY
75 NORTH 100 WEST
PO BOX 277
MIDWAY, UTAH 84049
(435) 654-3223

MIDWAY CITY
STANDARD DRAWING

STREETS - 5

H:\Midway City\Standard Drawings\2020 Standards\DRAWINGS\STREETS-5.dwg - Layout1 - 1/28/2020 10:20am, nataller

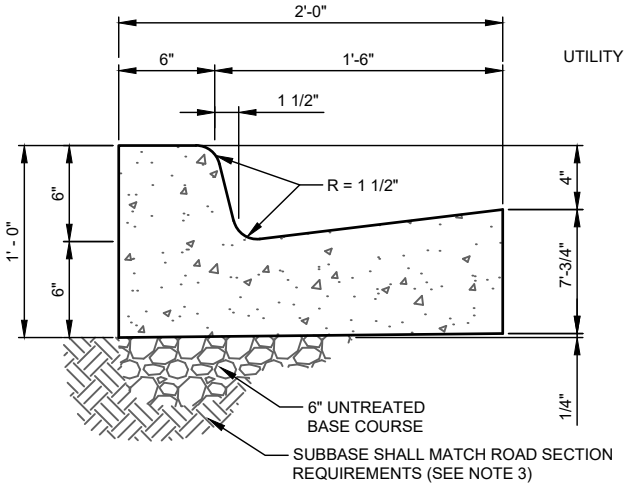

HIGH BACK CURB & GUTTER

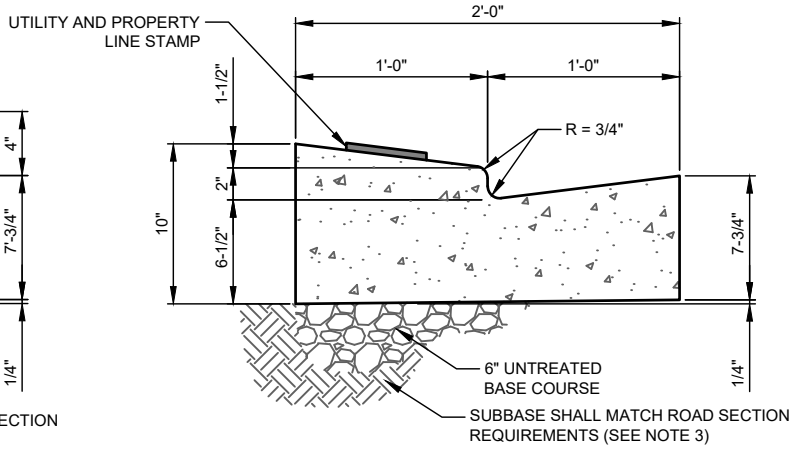

MODIFIED CURB & GUTTER

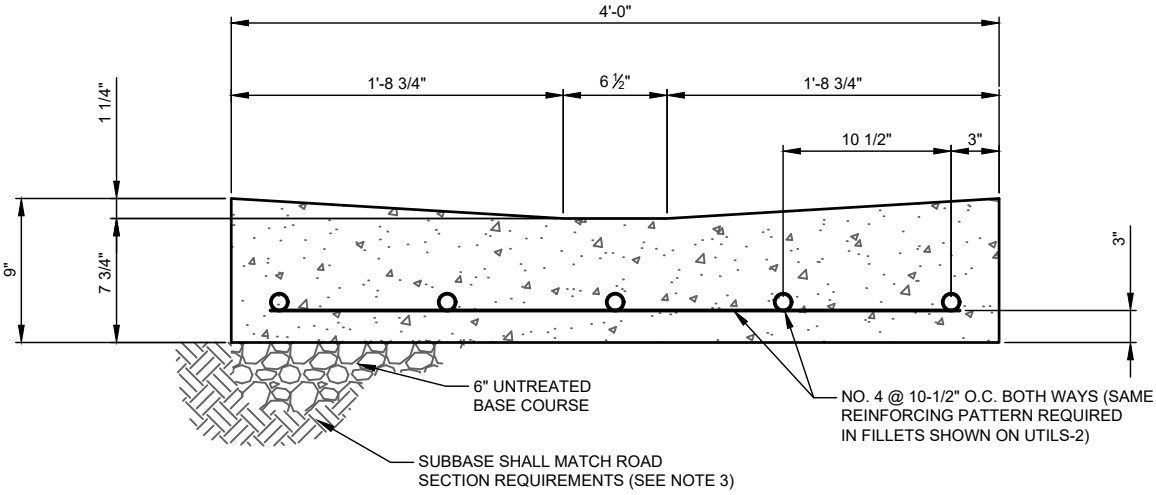

CROSS GUTTER

NOTES:

1. ALL PUBLIC UTILITIES SHALL BE STAMPED IN THE TOP BACK OF THE CURB & GUTTER AS FOLLOWS:
   W = WATER, S = SEWER, I = PRESSURIZED IRRIGATION
2. A BRASS PIN SHALL BE INSTALLED INDICATING ALL PROPERTY LINES.
3. IMPORT/ GRANULAR FILL, A-1-a GRADATED SUBBASE MAY BE REQUIRED WHEN EXISTING SUBBASE IS DETERMINED BY THE CITY ENGINEER TO BE UNSUITABLE AND SHALL BE IN ACCORDANCE WITH SECTION 02528.

S6 TYP — CURBS AND GUTTERS
N.T.S.

HORROCKS ENGINEERS

DATE: JANUARY 2020

HORROCKS ENGINGEERS
728 WEST 100 SOUTH #2
HEBER CITY, UTAH 84032
(435) 654-2226

MIDWAY CITY
75 NORTH 100 WEST
PO BOX 277
MIDWAY, UTAH 84049
(435) 654-3223

MIDWAY CITY
STANDARD DRAWING

STREETS - 6

H:\Midway City\Standard Drawings\2020 Standards\DRAWINGS\STREETS-6.dwg - Layout1 - 1/28/2020 09:53am, nataller

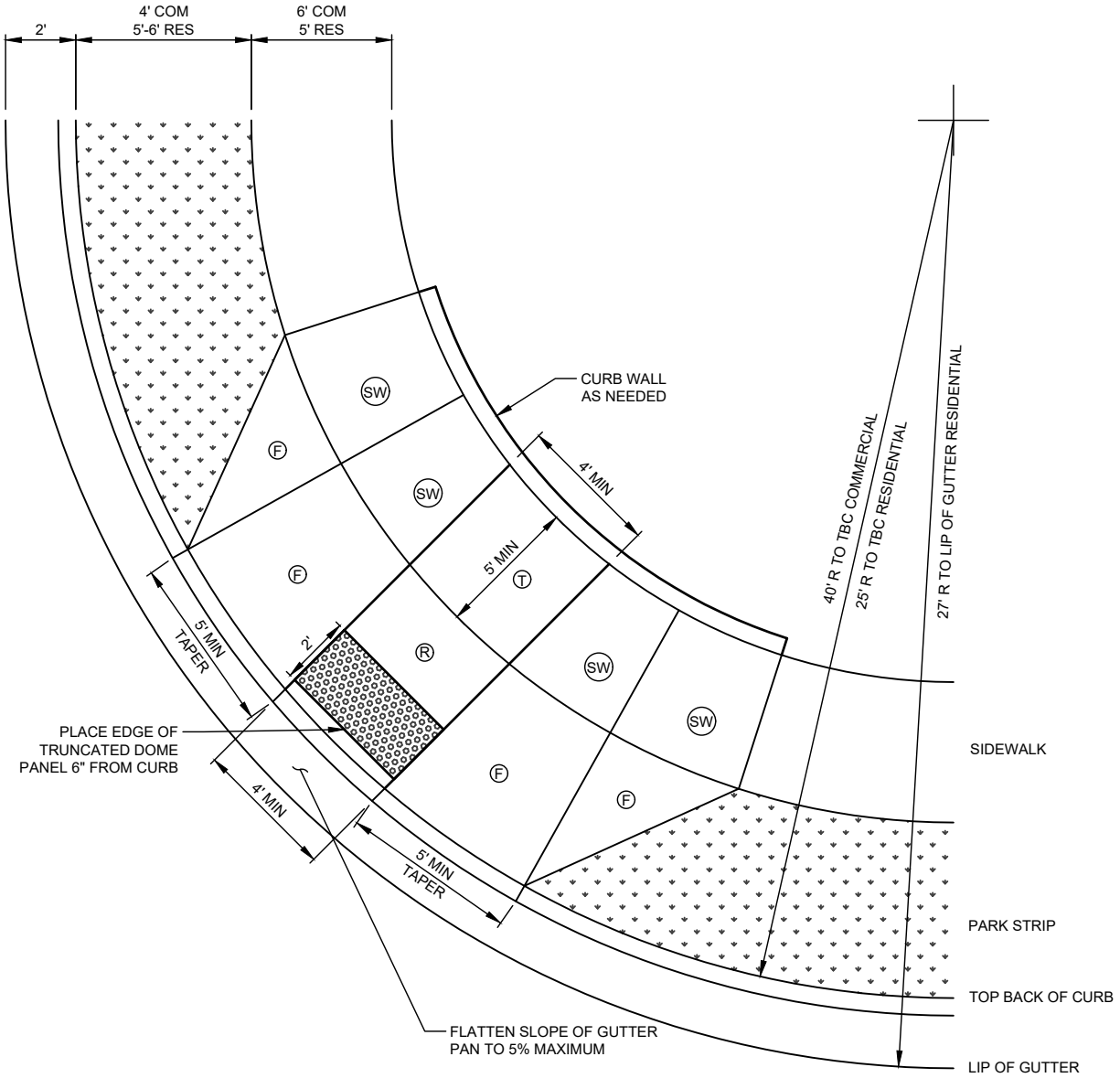

REQUIRED SLOPE TABLE		
LOCATION	RUNNING SLOPE	CROSS SLOPE
F	10% MAX	-
R	5.1% MIN TO 8.3% MAX	2% MAX *
T	2% MAX	2% MAX *
SW	-	2% MAX

* DO NOT EXCEED THE ROADWAY PROFILE GRADE FOR THE CROSS SLOPE AT LOCATIONS WITHOUT A STOP OR YIELD SIGN OR AT MID-BLOCK RAMPS.

NOTES:

1. RAMP TO INCLUDE ADA DETECTABLE WARNING STRIP; IE. ADA SOLUTIONS, ARMOR-TILE CAST-IN-PLACE, MASCO CASTINTACT, WAUSAU, OR TEKWAY.
2. COLOR OF ADA DETECTABLE WARNING STRIP SHALL BE DARK RED.
3. CURB TAPER SLOPE SHALL BE 10% MAXIMUM.
4. NO LIPS ALLOWED. AT THE CURB CUT, A LIP IS A VERTICAL DISCONTINUITY GREATER THAN 1/4". AT THE GUTTER/ROAD TRANSITION, A LIP IS A VERTICAL DISCONTINUITY GREATER THAN 1/2". VERTICAL DISCONTINUITIES GREATER THAN 1/4" SHALL BE BEVELED WITH A SLOPE NOT GREATER THAN 50%.
5. ALL PEDESTRIAN RAMPS ARE SUBJECT TO THE REQUIREMENTS SHOWN ON THE UDOT PEDESTRIAN ACCESS STANDARD DRAWINGS. WHERE CONFLICTS EXIST, THE MORE STRINGENT SHALL GOVERN.

S7 / TYP — CORNER PEDESTRIAN RAMP
N.T.S.

HORROCKS ENGINEERS

DATE: JANUARY 2020

HORROCKS ENGINGEERS
728 WEST 100 SOUTH #2
HEBER CITY, UTAH 84032
(435) 654-2226

MIDWAY CITY
75 NORTH 100 WEST
PO BOX 277
MIDWAY, UTAH 84049
(435) 654-3223

MIDWAY CITY
STANDARD DRAWING

STREETS - 7

H:\Midway City\Standard Drawings\2020 Standards\DRAWINGS\STREETS-7.dwg - 85x11 - 1/28/2020 09:53am, natalier

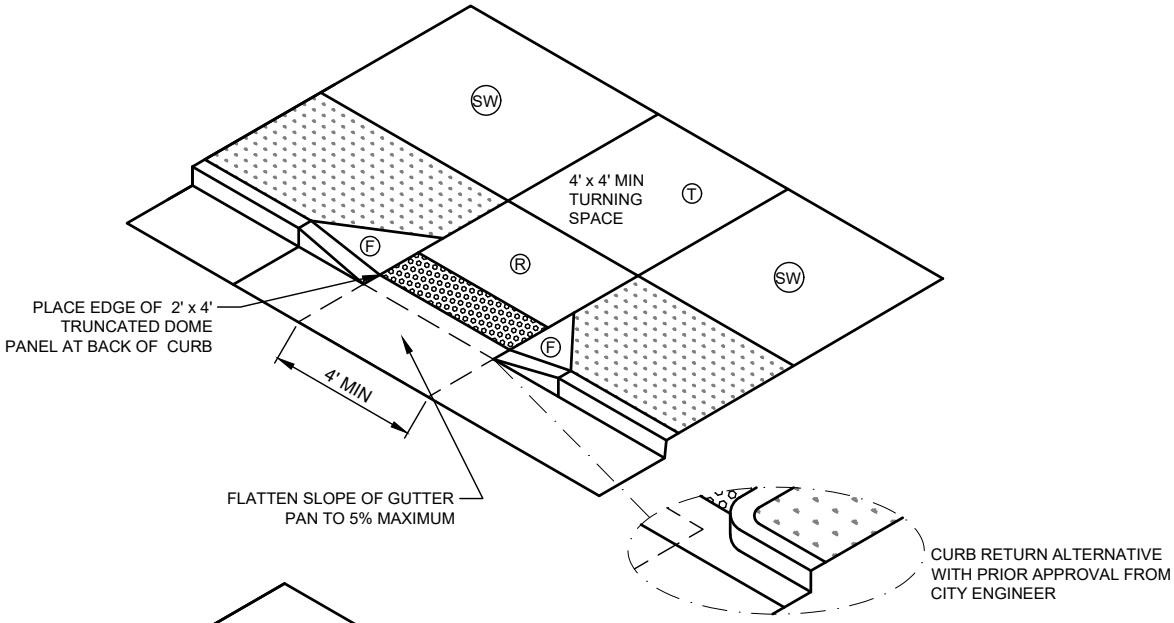

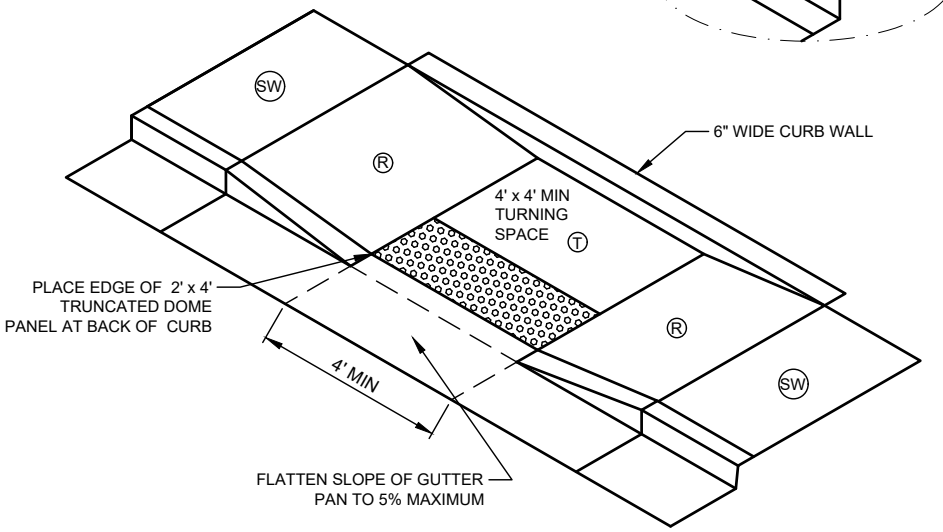

REQUIRED SLOPE TABLE		
LOCATION	RUNNING SLOPE	CROSS SLOPE
F	25% MAX (SEE NOTE 3)	-
R	5.1% MIN TO 8.3% MAX	2% MAX *
T	2% MAX	2% MAX *
SW	-	2% MAX

* DO NOT EXCEED THE ROADWAY PROFILE GRADE FOR THE CROSS SLOPE AT LOCATIONS WITHOUT A STOP OR YIELD SIGN OR AT MID-BLOCK RAMPS.

NOTES:

1. RAMP TO INCLUDE ADA DETECTABLE WARNING STRIP; IE. ADA SOLUTIONS, ARMOR-TILE CAST-IN-PLACE, MASCO CASTINTACT, WAUSAU, OR TEKWAY.
2. COLOR OF ADA DETECTABLE WARNING STRIP SHALL BE DARK RED.
3. CURB TAPER SLOPE FOR FLARES SHALL BE 10% MAXIMUM IF IT FALLS WITHIN THE PEDESTRIAN ACCESS ROUTE AS DEFINED BY UDOT.
4. NO LIPS ALLOWED. AT THE CURB CUT, A LIP IS A VERTICAL DISCONTINUITY GREATER THAN 1/4". AT THE GUTTER/ROAD TRANSITION, A LIP IS A VERTICAL DISCONTINUITY GREATER THAN 1/2". VERTICAL DISCONTINUITIES GREATER THAN 1/4" SHALL BE BEVELED WITH A SLOPE NOT GREATER THAN 50%.
5. ALL PEDESTRIAN RAMPS ARE SUBJECT TO THE REQUIREMENTS SHOWN ON THE UDOT PEDESTRIAN ACCESS STANDARD DRAWINGS. WHERE CONFLICTS EXIST, THE MORE STRINGENT SHALL GOVERN.

S8 / TYP — MID-BLOCK PEDESTRIAN RAMPS
N.T.S.

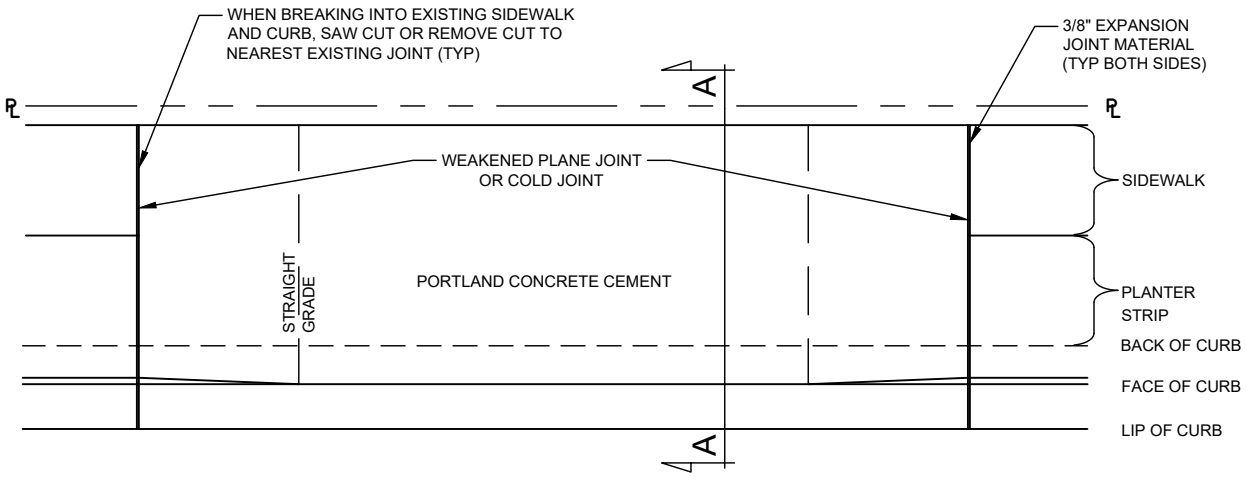

PLAN

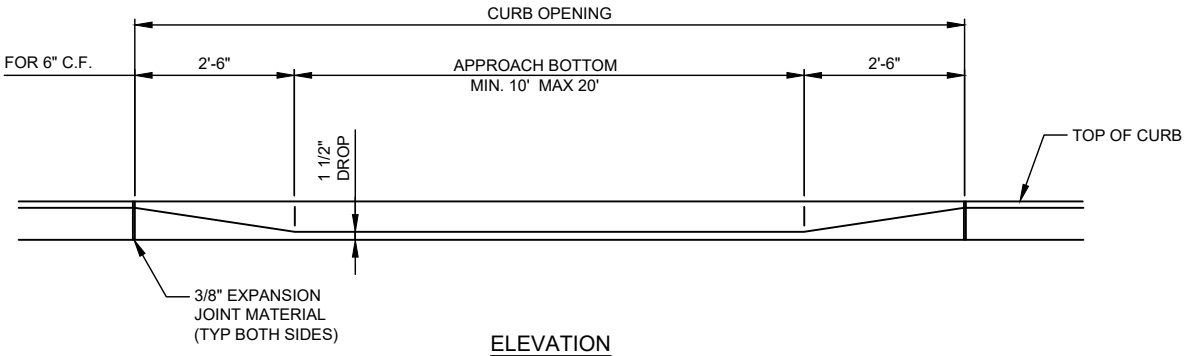

ELEVATION

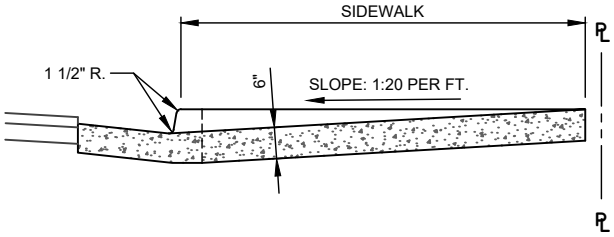

SECTION A-A

NOTES:

1. CURB OPENING SHALL HAVE A COURSE BROOM FINISH.
2. C.F. = CURB FACE.

S9 TYP — RESIDENTIAL DRIVEWAY APPROACH

N.T.S.

HORROCKS ENGINEERS

DATE: JANUARY 2020

HORROCKS ENGINGEERS
728 WEST 100 SOUTH #2
HEBER CITY, UTAH 84032
(435) 654-2226

MIDWAY CITY
75 NORTH 100 WEST
PO BOX 277
MIDWAY, UTAH 84049
(435) 654-3223

MIDWAY CITY STANDARD DRAWING

STREETS - 9

H:\Midway City\Standard Drawings\2020 Standards\DRAWINGS\STREETS-9.dwg - Layout1 - 1/28/2020 09:53am, natalier

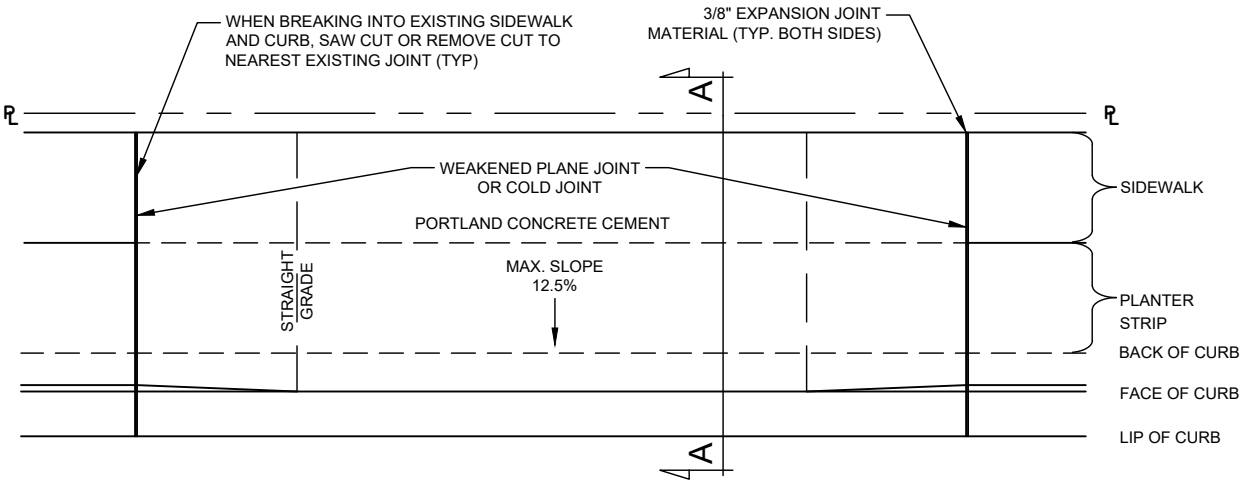

PLAN

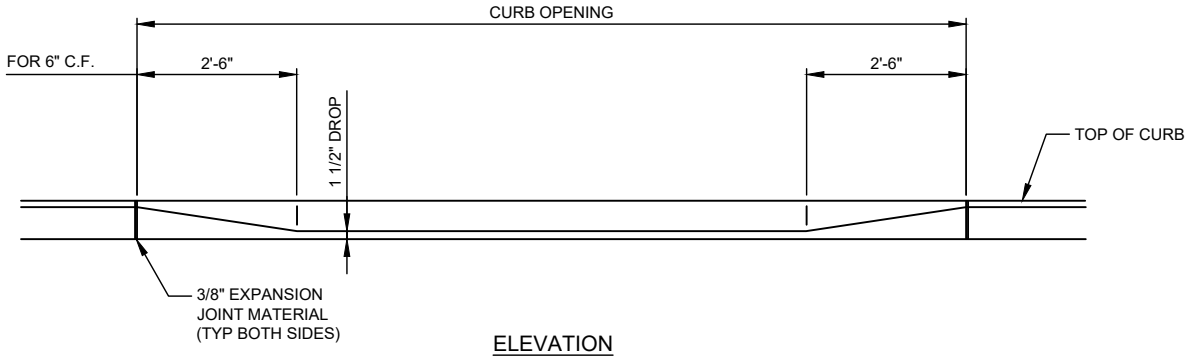

ELEVATION

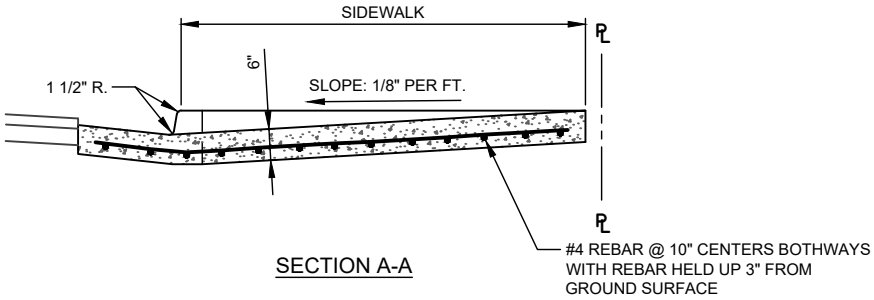

SECTION A-A

NOTES:

1. CURB OPENING SHALL HAVE A COURSE BROOM FINISH.
2. C.F. = CURB FACE.

S10 / TYP

COMMERCIAL DREIVEWAY APPROACH

N.T.S.

HORROCKS ENGINEERS

DATE: JANUARY 2020

HORROCKS ENGINGEERS
728 WEST 100 SOUTH #2
HEBER CITY, UTAH 84032
(435) 654-2226

MIDWAY CITY
75 NORTH 100 WEST
PO BOX 277
MIDWAY, UTAH 84049
(435) 654-3223

MIDWAY CITY STANDARD DRAWING

STREETS - 10

H:\Midway City\Standard Drawings\2020 Standards\DRAWINGS\STREETS-10.dwg - Layout1 - 1/28/2020 09:53am, natalier

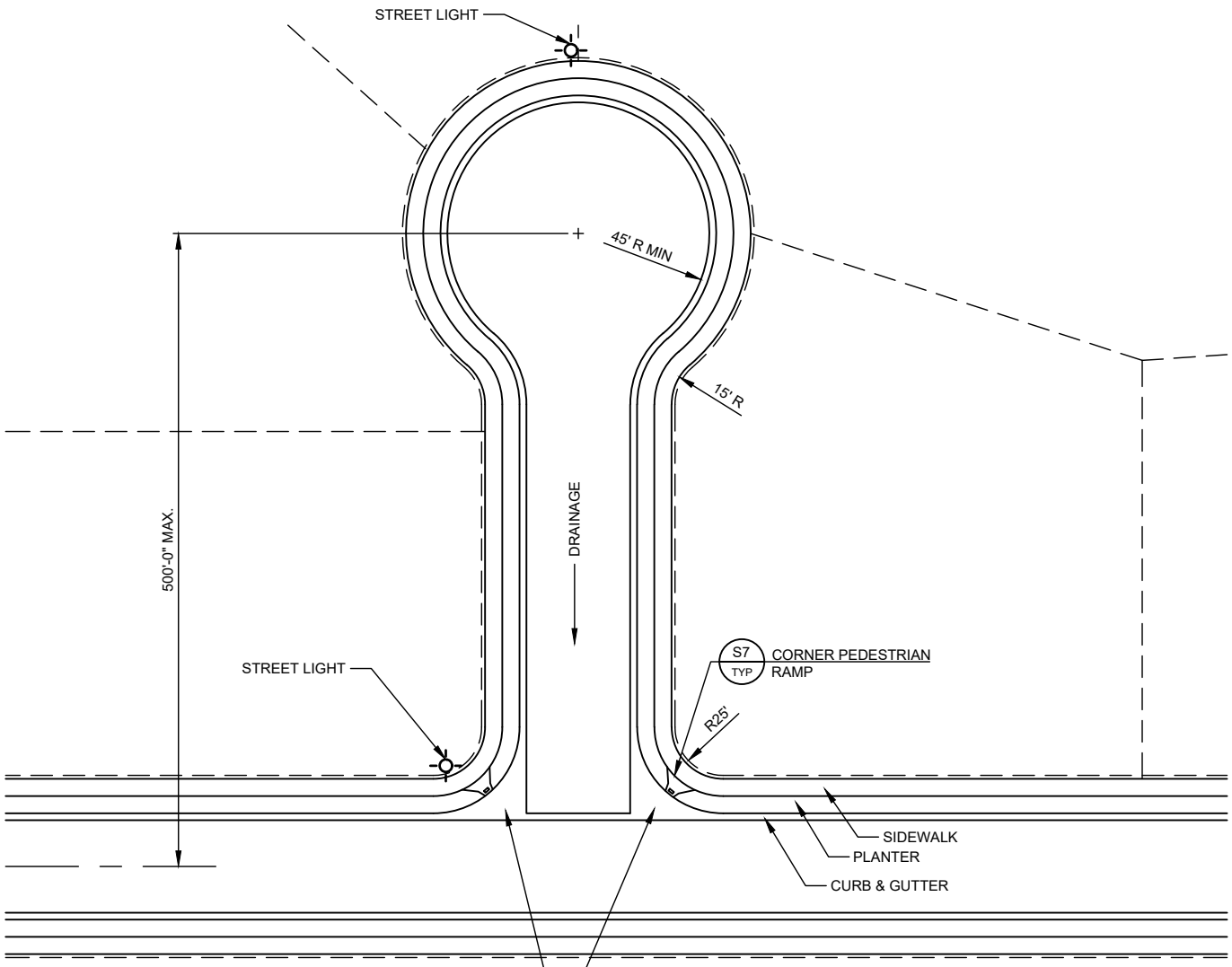

CONCRETE FULL FROG WHERE REQUIRED (SEE STREETS-6 FOR REBAR SPACING) S6 TYP

NOTE:
1. STREET LIGHTS SHALL BE INSTALLED AT EACH INTERSECTION ON THE SIDE OF STOP SIGN IF POSSIBLE AND AT END OF CUL-DE-SAC.

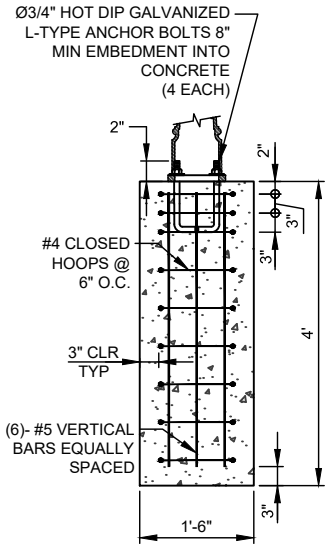

CONCRETE STREET LIGHT BASE

S11 TYP CUL-DE-SAC PLANS
N.T.S.

H:\Midway City\Standard Drawings\2020 Standards\DRAWINGS\STREETS-11.dwg - Layout1 - 1/28/2020 09:53am, natalier

HORROCKS ENGINEERS

DATE: JANUARY 2020

HORROCKS ENGINGEERS
728 WEST 100 SOUTH #2
HEBER CITY, UTAH 84032
(435) 654-2226

MIDWAY CITY
75 NORTH 100 WEST
PO BOX 277
MIDWAY, UTAH 84049
(435) 654-3223

MIDWAY CITY STANDARD DRAWING

STREETS - 11

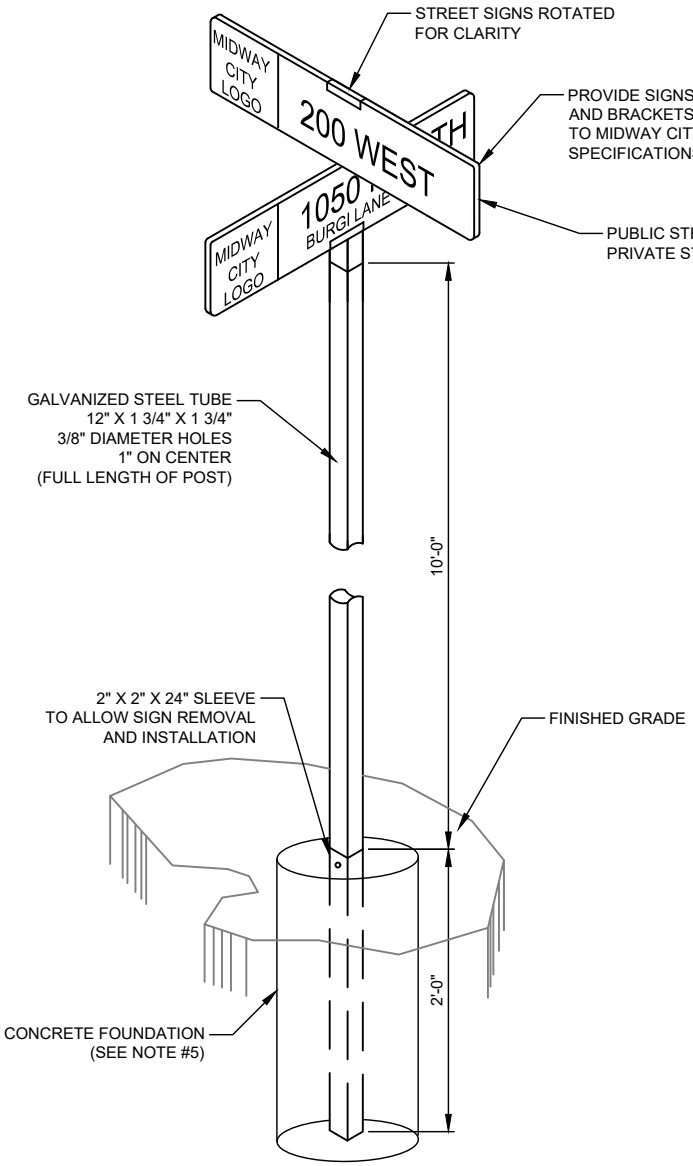

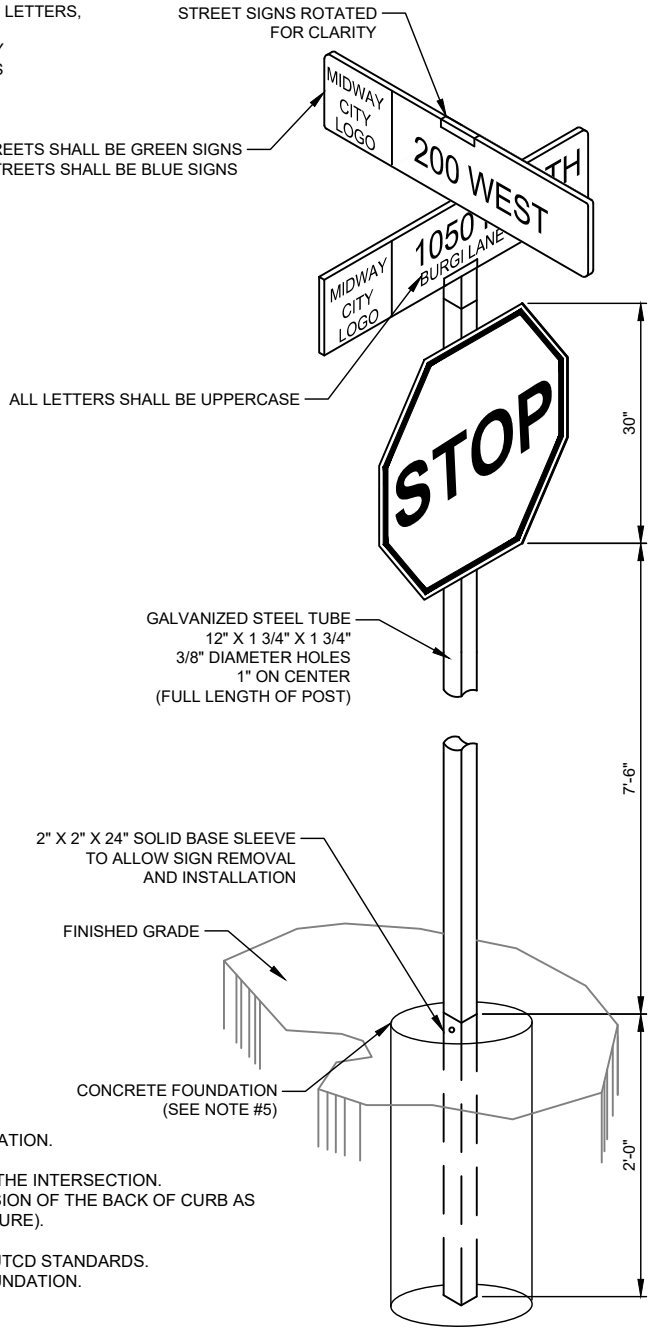

NOTES:
1. FORMAT: SECURE ENGINEER'S APPROVAL OF SIGN FORMAT AND INSTALLATION.
2. INSTALLATION:
   2.A. INSTALL SIGNS ON THE NORTH-WEST OR SOUTH-EAST CORNERS OF THE INTERSECTION.
   2.B. INSTALL THE EDGE OF THE SIGN 2 FEET FROM THE VERTICAL EXTENSION OF THE BACK OF CURB AS NEAR AS POSSIBLE TO THE APPROACH CURB P.C. (POINT OF CURVATURE).
3. NAMED STREETS SHOULD ALSO INCLUDE NUMERIC LOCATION ON SIGN.
4. ALL REGULATORY SIGNS SHALL COMPLY WITH THE LATEST UDOT AND MUTCD STANDARDS.
5. INSTALL CONCRETE FOUNDATION 2' DEEP AND 1' MINIMUM DIAMETER FOUNDATION.

STREET NAME SIGNS:
1. SIZE 38" X 9".
2. DOUBLE BLADED .080 ALUMINUM WITH RIVETED ENDS AND BACK WASHERS.
3. 6" C SERIES UPPER CASE LETTERS FOR COORDINATE.
4. 3 1/2" C SERIES UPPER CASE LETTERS FOR COORDINATE AND 2" C SERIES UPPERCASE LETTERS FOR STREET NAME.
5. DIAMOND GRADE TYPE 9 LETTERING & BACKGROUND SHEETING.
6. 8" X 8" LOGO LEFT HAND PORTION OF SIGN.
7. LOGO COLOR: BLUE, BLACK, AND RED ON WHITE.
8. MIDWAY CITY LOGO AS APPROVED BY MIDWAY CITY.
9. STREET NAME SIGNS THAT GO ON MAIN ROADS ARE THE SAME AS ABOVE BUT ARE MADE OUT OF DIAMOND GRADE TYPE 9 LETTERING AND SHEETING.

REGULATORY SIGNS:
1. ALL STOP (R1-1-30), YIELD (R1-2-36) & SPEED LIMIT (R2-1-24) SIGNS ARE .080 ALUMINUM WITH SHEETING.
2. SPEED LIMIT SIGNS SHALL BE A MIN 24" X 30".
3. INFORMATIONAL AND WARNING SHALL BE 30" X 30".
4. ALL SIGNS .080 ALUMINUM DIAMOND GRADE TYPE 9 LETTERING AND SHEETING.

S12 / TYP — STREET SIGN
N.T.S.

HORROCKS ENGINEERS

DATE: JANUARY 2020

HORROCKS ENGINGEERS
728 WEST 100 SOUTH #2
HEBER CITY, UTAH 84032
(435) 654-2226

MIDWAY CITY
75 NORTH 100 WEST
PO BOX 277
MIDWAY, UTAH 84049
(435) 654-3223

MIDWAY CITY STANDARD DRAWING

STREETS - 12

H:\Midway City\Standard Drawings\2020 Standards\DRAWINGS\STREETS-12.dwg - Layout1 - 1/28/2020 09:53am, nataliler

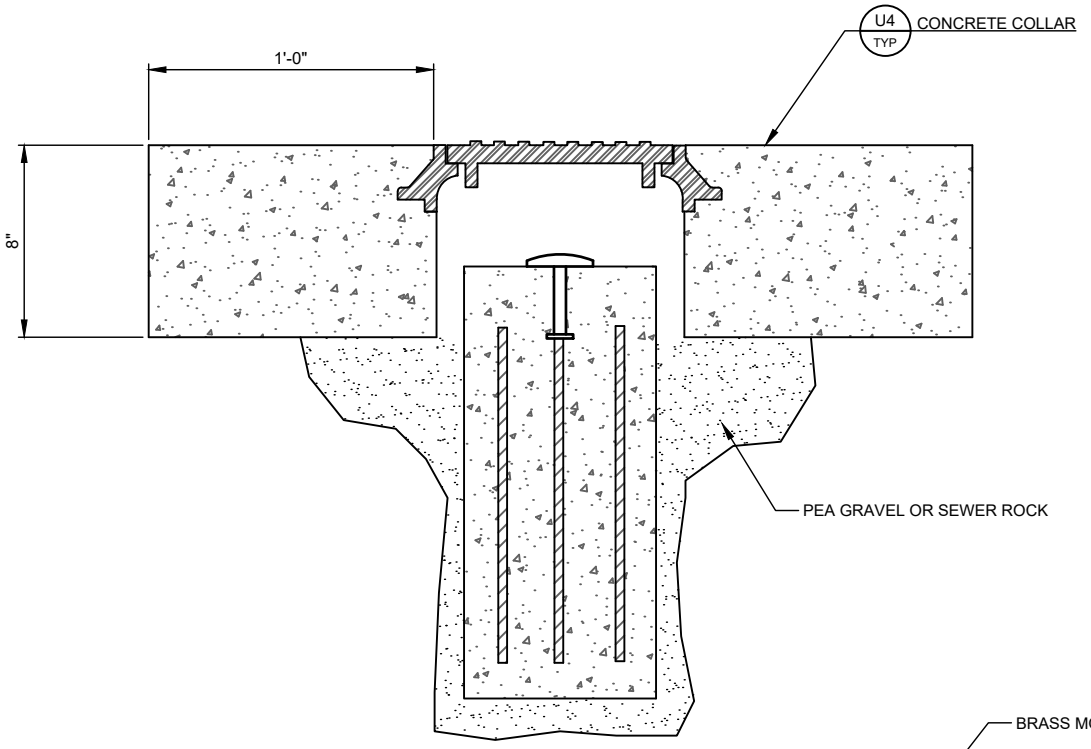

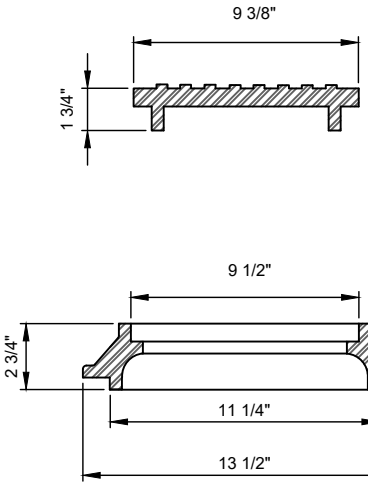

D & L SUPPLY # K-6313 OR APPROVED EQUAL

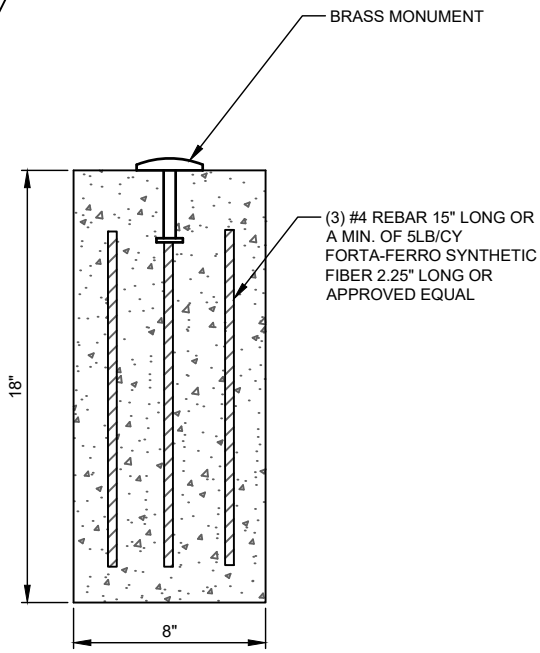

NOTES:
1. CAP SHOULD INCLUDE MONUMENT OWNER, DATE OF SURVEY, AND LICENSE #.
2. CONCRETE BASE FOR THE SURVEY MONUMENT SHOULD BE INDEPENDENT OF CONCRETE COLLAR OF LID TO MINIMIZE VIBRATIONS TO MONUMENT.
3. CONCRETE BASE SHOULD BE INSTALLED USING PEA GRAVEL OR SEWER ROCK.
4. LOCATE AT CENTERLINE OF INTERSECTIONS AND CUL-DE-SACS.
5. TO BE INSTALLED AS LOCATED BY WASATCH COUNTY SURVEYOR.

S13 TYP STREET MONUMENT
N.T.S.

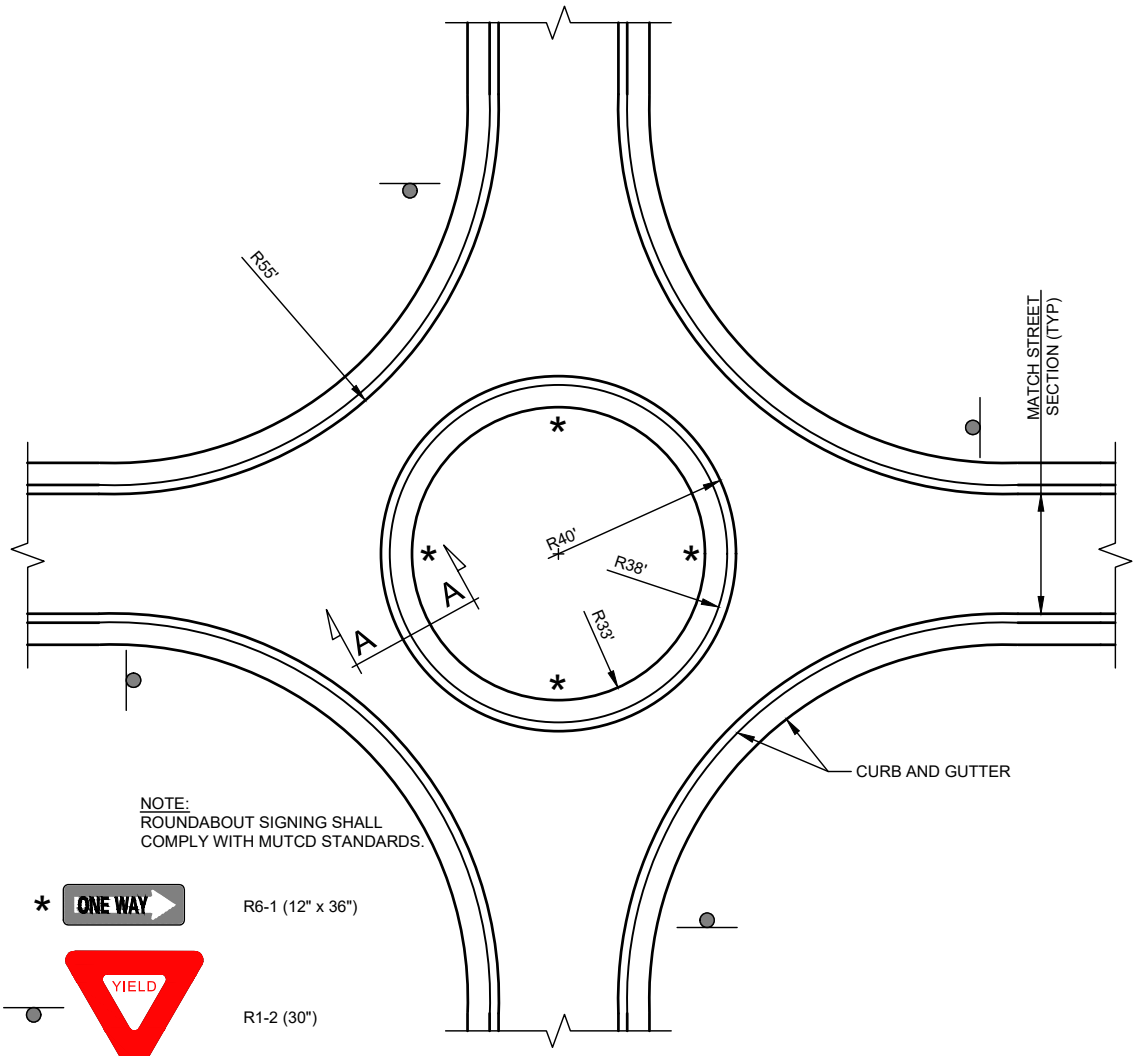

NOTE:
ROUNDABOUT SIGNING SHALL COMPLY WITH MUTCD STANDARDS.

* ONE WAY — R6-1 (12" x 36")

YIELD — R1-2 (30")

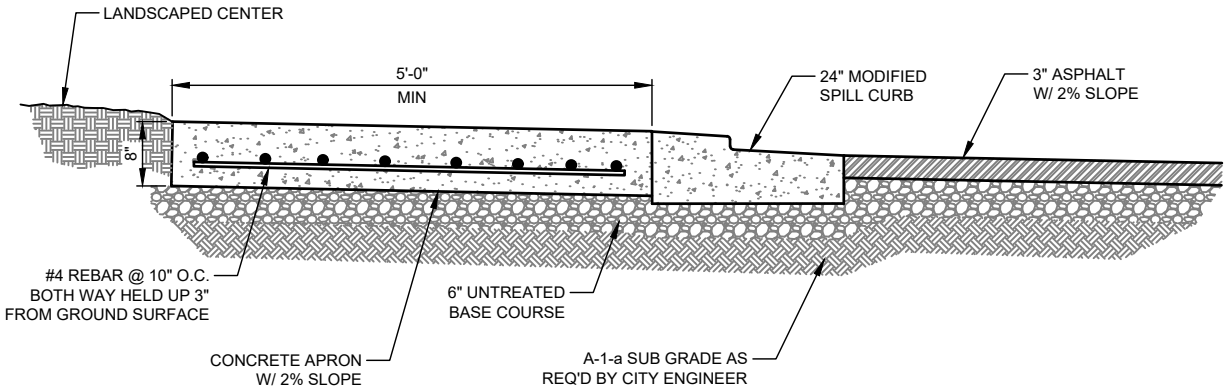

SECTION A-A

S14 TYP — RESIDENTIAL ROUNDABOUT
N.T.S.

CITY OF MIDWAY. RESIDENTIAL LP-1

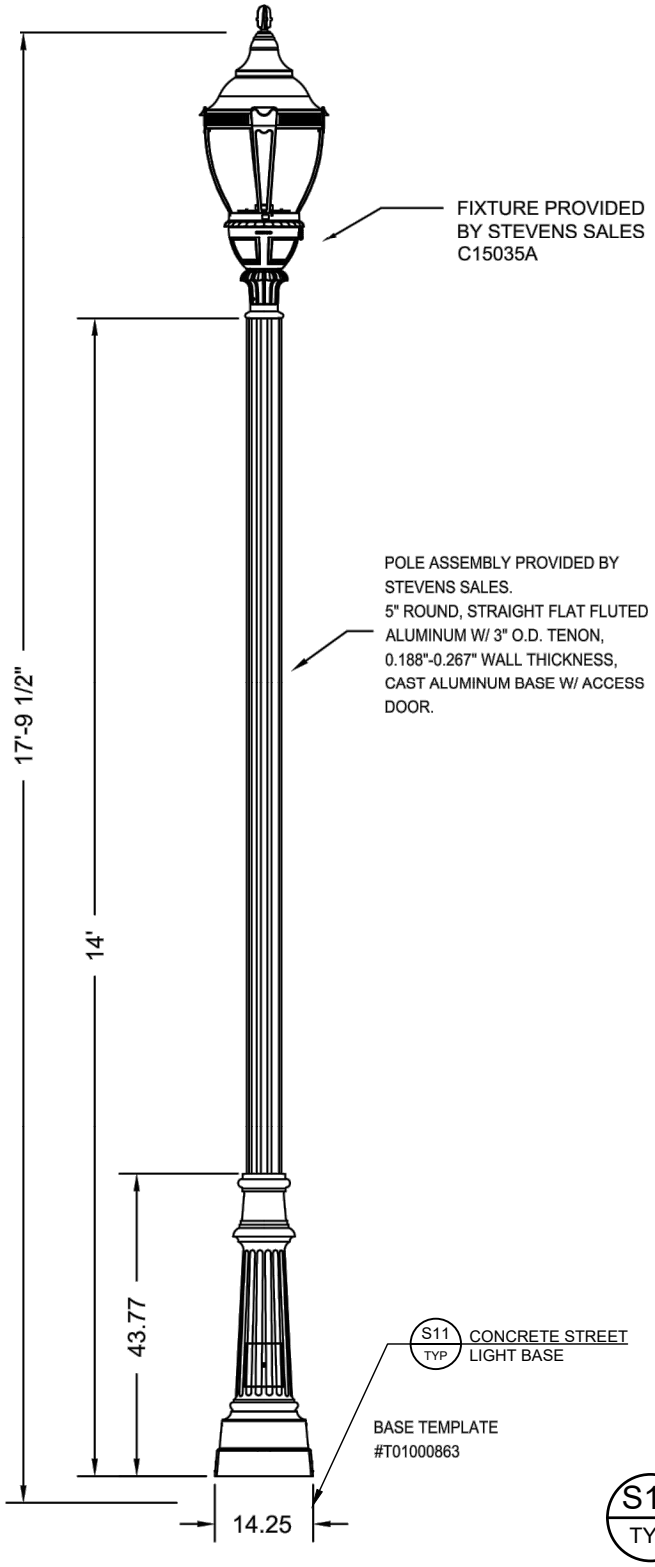

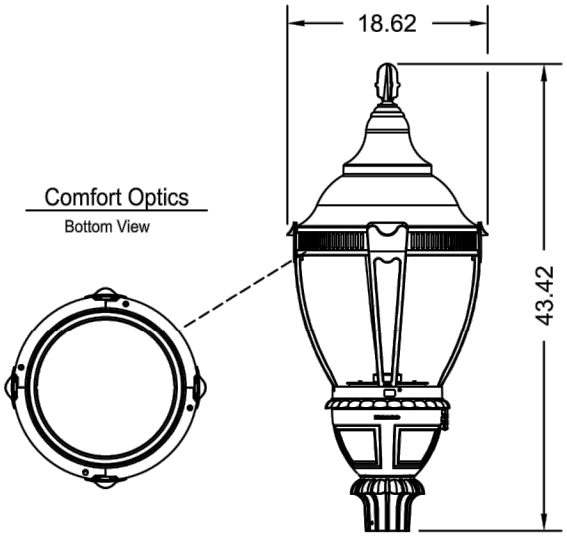

Comfort Optics Specifications:

- 140, 3000K (warm) LEDs, typical 75 Color Rendering Index (CRI), >100,000 hours of operational life (at 25°C ambient temperature & 70% lumen maintenance), Type 3, IP66 rated optical system.
- Integral Advance Xitanium LED driver, class 1, IP66 rated, 1150mA , IntelliVolt 120-277 VAC, 50-60 Hz, RoHS compliant, 10kV/10kA surge suppression.
- Delivered lumens: 4390, Wattage: 52W.
- Field Adjustable Wattage Switch (FAWS).

Luminaire Certifications:

- UL8750 & UL1598 compliant, ETL/cETL listed to U.S. & Canadian safety standards for wet locations, manufactured to ISO 9001:2008 standards, LM79 & LM80 tested.

S15 TYP RESIDENTIAL STREET LIGHTING
N.T.S.

HORROCKS ENGINEERS

DATE: JANUARY 2020

HORROCKS ENGINGEERS
728 WEST 100 SOUTH #2
HEBER CITY, UTAH 84032
(435) 654-2226

MIDWAY CITY
75 NORTH 100 WEST
PO BOX 277
MIDWAY, UTAH 84049
(435) 654-3223

MIDWAY CITY STANDARD DRAWING

STREETS - 15

H:\Midway City\Standard Drawings\2020 Standards\DRAWINGS\STREETS-14.dwg - STREETS-15 - 1/28/2020 09:53am, natalier

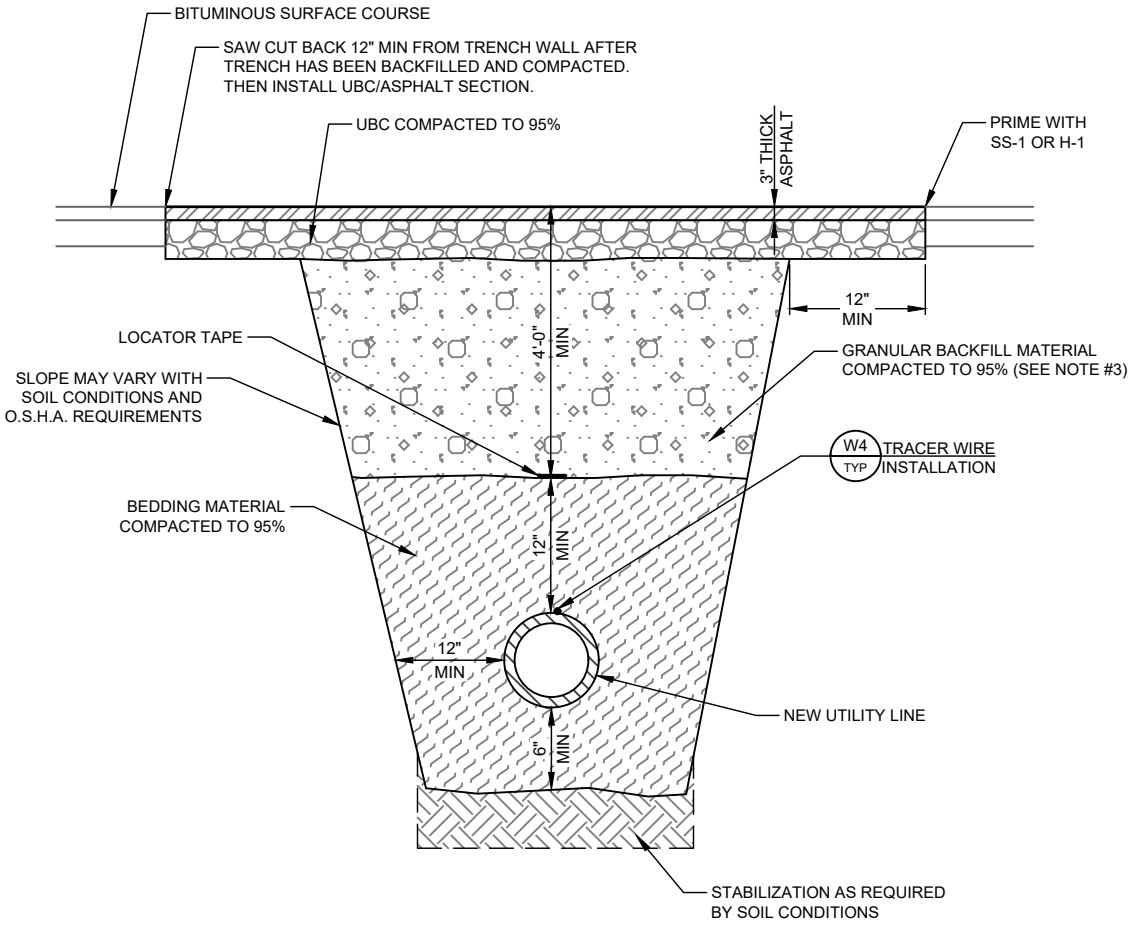

NOTES:

1. COMPACTED BEDDING MATERIAL SHALL CONSIST OF SAND, OR WELL GRADED CRUSHED ROCK 1/2" MINIMUM 3/4" MAXIMUM. MATERIALS, METHOD AND COMPACTION, SHALL BE APPROVED BY ENGINEER. PEA GRAVEL IS PROHIBITED, EXCEPT WHEN APPROVED BY ENGINEER.
2. USE PROPER MARKER TAPE APPROVED BY ENGINEER.
3. REFER TO SECTION 02225-3.08 FOR COMPACTION DETAILS.

U1 TYP

UTILITY INSTALLATION IN EXISTING ROADWAY

N.T.S.

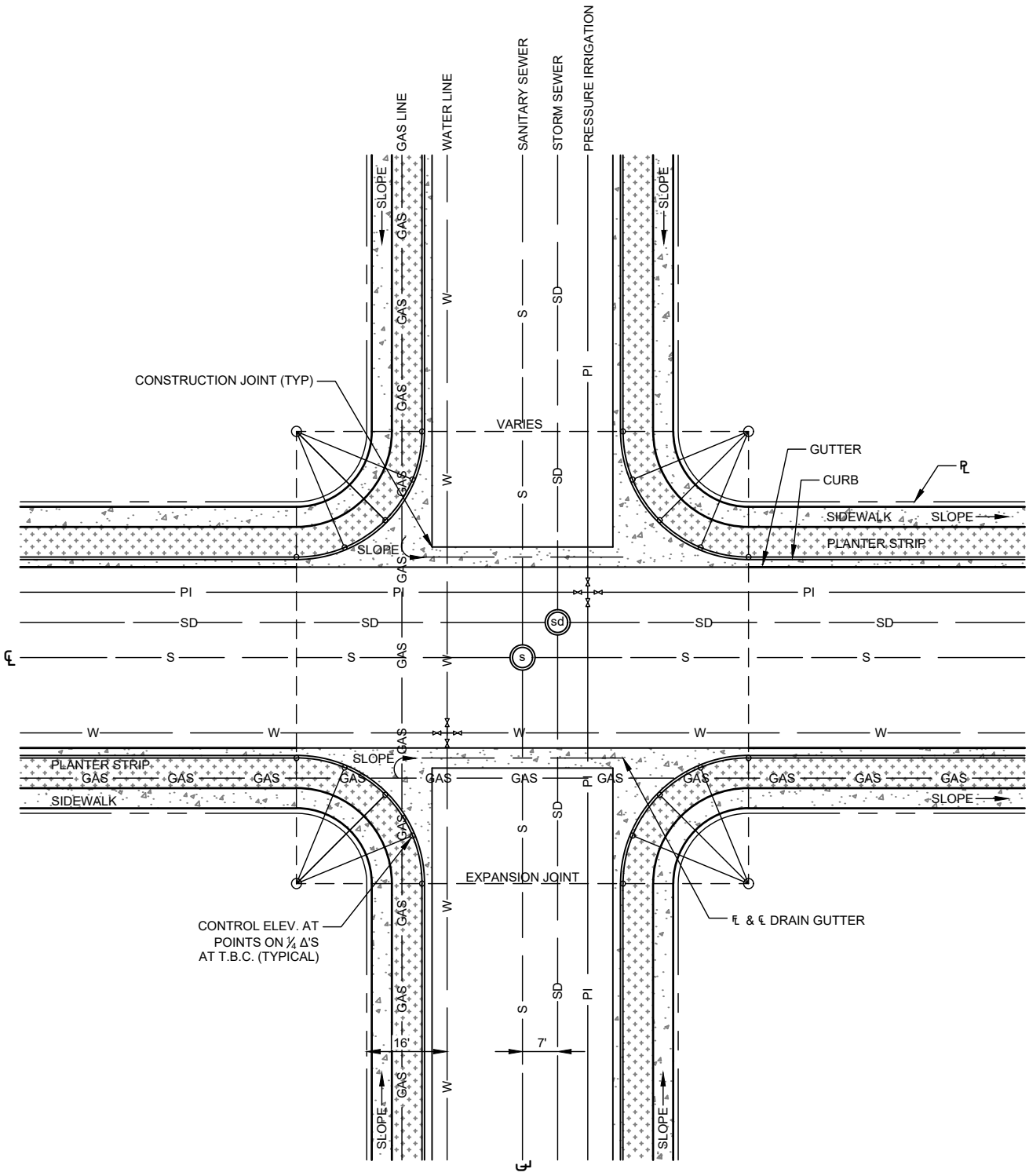

U2 TYP

STANDARD STREET INTERSECTION AND UTILITY LOCATIONS

DETAIL INFO

HORROCKS ENGINEERS

DATE: JANUARY 2020

HORROCKS ENGINGEERS
728 WEST 100 SOUTH #2
HEBER CITY, UTAH 84032
(435) 654-2226

MIDWAY CITY
75 NORTH 100 WEST
PO BOX 277
MIDWAY, UTAH 84049
(435) 654-3223

MIDWAY CITY STANDARD DRAWING

UTILITY - 2

H:\Midway City\Standard Drawings\2020 Standards\DRAWINGS\UTILS-2.dwg - Layout1 - 1/28/2020 09:54am, natalier

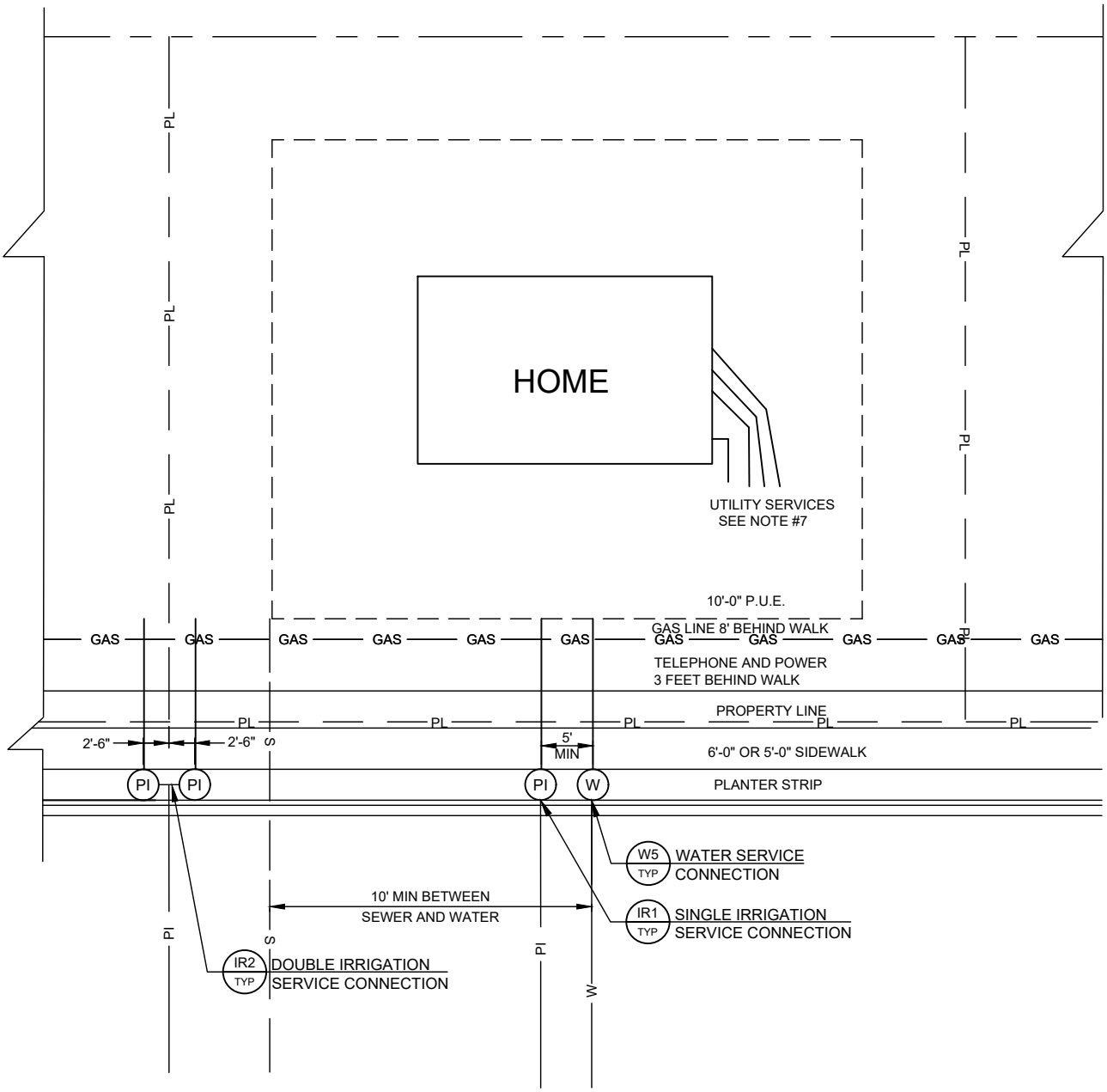

NOTES:

1. WATER METER WILL NOT BE INSTALLED IF METER CAN IS INSTALLED INCORRECTLY OR IN DRIVEWAY.
2. P.I. SHOULD BE STUBBED 1' PAST SIDEWALK, FIVE FEET EITHER SIDE OF THE WATER LATERAL.
3. SEWER LATERAL SHOULD BE STUBBED 10' PAST PROPERTY LINE, 10' FROM SIDE OF LOT ON DOWN HILL SIDE.
4. WATER LATERAL SHOULD BE STUBBED IN 10' PAST PROPERTY LINE IN THE CENTER OF LOT.
5. WATER CAN AND P.I. BOX SHOULD BE CENTERED IN PLANTER STRIP, IF COMBINATION SIDEWALK 1' BEHIND WALK.
6. ALL LATERALS SHOULD BE MARKED WITH A 2' x 4' STAKE.
7. ALL PUBLIC UTILITIES SHALL BE STAMPED IN THE TOP BACK OF CURB: "W"=WATER, "S"=SEWER, "PI"=PRESSURIZED IRRIGATION.
8. A BRASS PIN SHALL BE INSTALLED IN TOP BACK OF CURB INDICATING ALL PROPERTY LINES.
9. GAS, TELEPHONE/POWER, AND CABLE TV SERVICES MUST HAVE AT LEAST 2' SEPARATION.

U3 TYP — LATERAL AND UTILITY LOCATION
N.T.S.

HORROCKS ENGINEERS

DATE: JANUARY 2020

HORROCKS ENGINGEERS
728 WEST 100 SOUTH #2
HEBER CITY, UTAH 84032
(435) 654-2226

MIDWAY CITY
75 NORTH 100 WEST
PO BOX 277
MIDWAY, UTAH 84049
(435) 654-3223

MIDWAY CITY STANDARD DRAWING

UTILITY - 3

H:\Midway City\Standard Drawings\2020 Standards\DRAWINGS\UTILS-3.dwg - Layout1 - 1/28/2020 09:54am, natalier

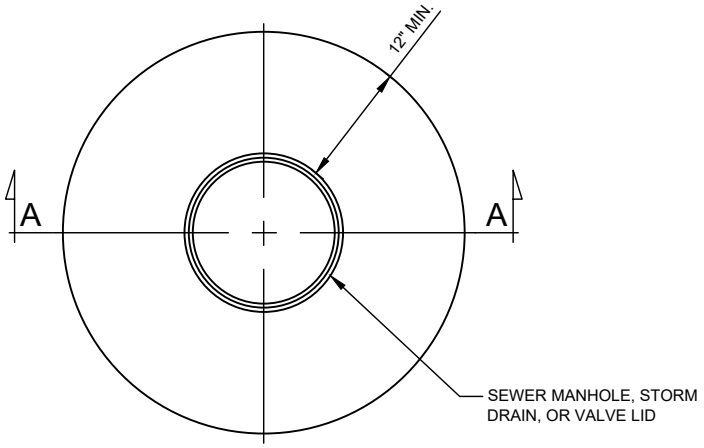

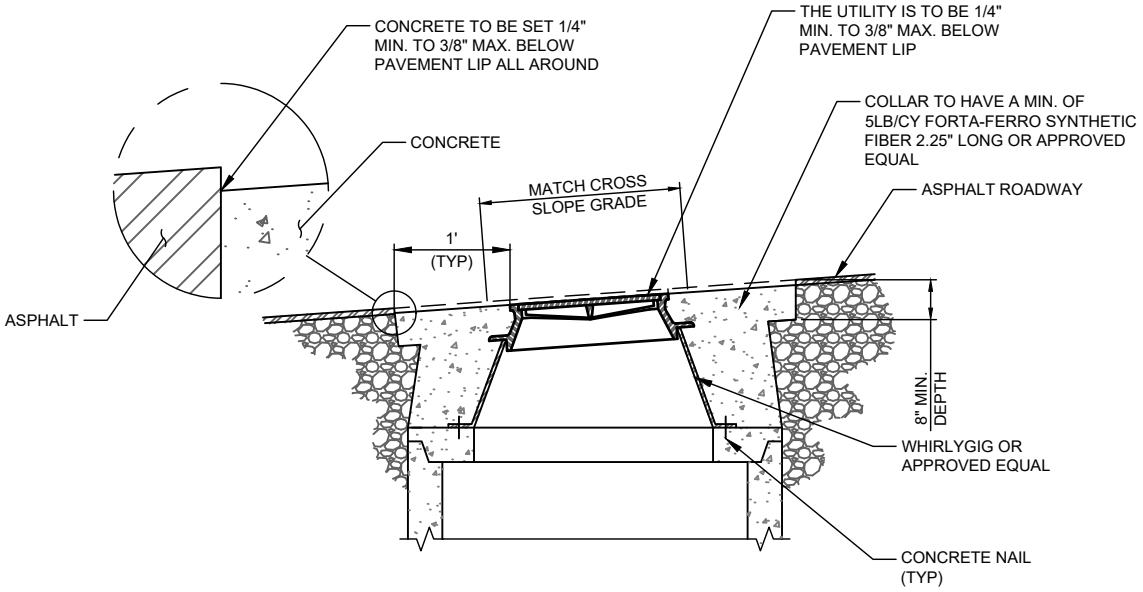

SECTION A-A

NOTES:

1. CONCRETE COLLAR, CLASS 4500 PSI, 7 BAG MIX, SEE SECTION 03304.
2. COLLAR PERIMETER SHALL BE CUT USING A SAW UNLESS APPROVED BY THE ENGINEER.
3. DETAIL IS FOR ALL MANHOLES AND VALVES.
4. ALL MANHOLES, CATCH BASINS, VALVE BOXES AND VERTICAL STRUCTURES SHALL BE COMPACTED USING A JUMPING JACK TYPE DEVICE WITH MAXIMUM LIFTS NOT TO EXCEED 6 INCHES OR AS RECOMMENDED BY JUMPING JACK MANUFACTURES. DENSITY TESTS SHALL BE TAKEN AT EVERY MANHOLE, CATCH BASIN, VALVE BOX AND VERTICAL STRUCTURES.

U4 / TYP — CONCRETE COLLAR

N.T.S.

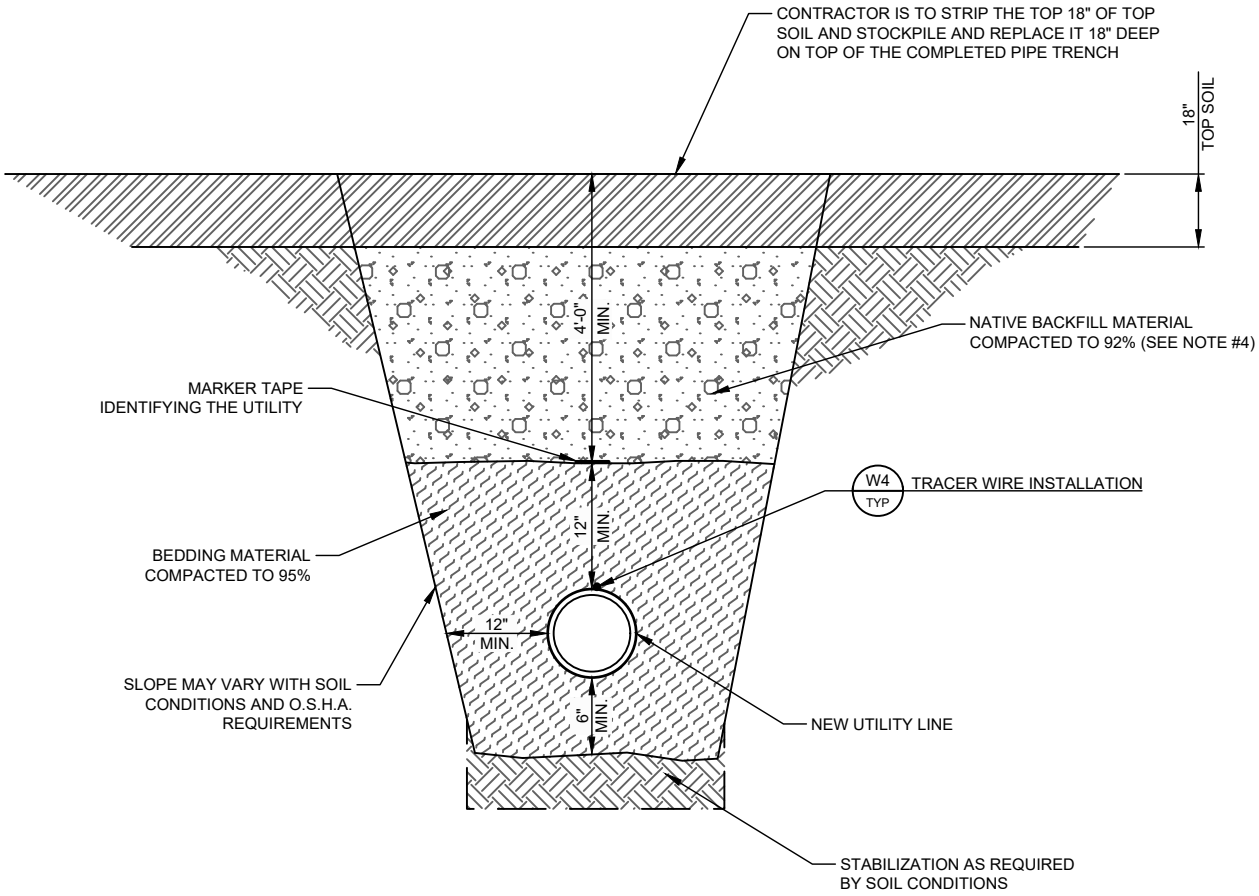

NOTES:

1. COMPACTED BEDDING MATERIAL SHALL CONSIST OF SAND, OR WELL GRADED CRUSHED ROCK 1/2" MINIMUM 3/4" MAXIMUM. MATERIALS, METHOD & COMPACTION, SHALL BE APPROVED BY ENGINEER. PEA GRAVEL IS PROHIBITED, EXCEPT WHEN APPROVED BY ENGINEER.
2. CONTRACTOR SHALL RE-SEED DISTURBED PROPERTY WITH AGRICULTURAL SEED MIXTURE APPROVED BY PROPERTY OWNER.
3. USE PROPER MARKER TAPE APPROVED BY ENGINEER.
4. REFER TO SECTION 02225-3.08 FOR COMPACTION DETAILS.

U5 / TYP

UTILITY INSTALLATION OUTSIDE OF ROADWAY

N.T.S.

HORROCKS ENGINEERS

DATE: JANUARY 2020

HORROCKS ENGINGEERS
728 WEST 100 SOUTH #2
HEBER CITY, UTAH 84032
(435) 654-2226

MIDWAY CITY
75 NORTH 100 WEST
PO BOX 277
MIDWAY, UTAH 84049
(435) 654-3223

MIDWAY CITY STANDARD DRAWING

UTILITY - 5

H:\Midway City\Standard Drawings\2020 Standards\DRAWINGS\UTILS-5.dwg - Layout1 - 1/28/2020 09:54am, natalier

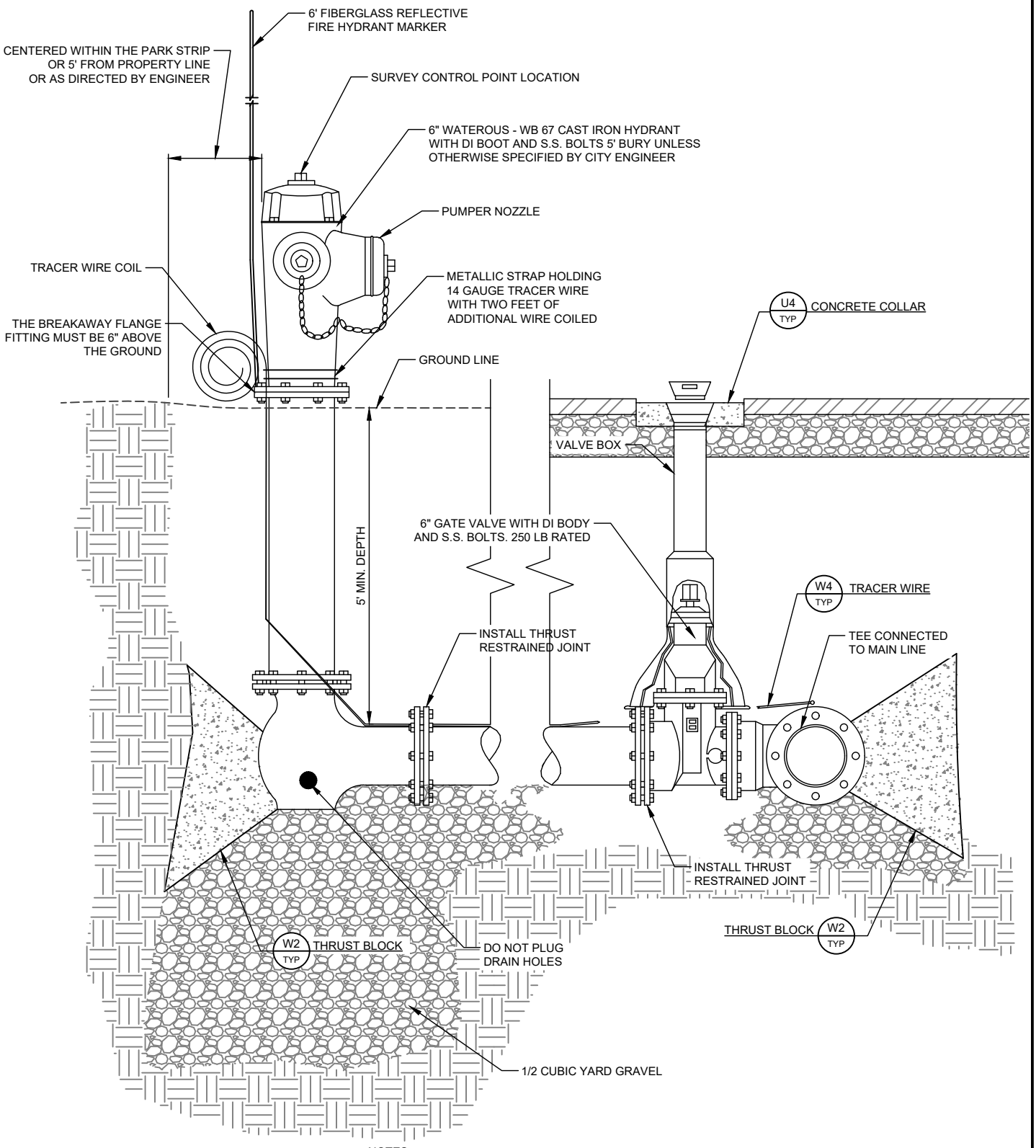

NOTES:

1. FIRE HYDRANTS AT INTERSECTIONS MUST BE WITHIN 5' - 7' OF A STREET LIGHT WHEN POSSIBLE.
2. ALL PIPE COUPLINGS AND FITTINGS ARE REQUIRED TO BE NEW MEGALUG RESTRAINED JOINT FITTINGS WITH STAINLESS STEEL BOLTS.
3. INSTALL VALVE EXTENSION IF OPERATING NUT GREATER THAN 4 FEET BELOW THE LID.

W1 TYP — STANDARD FIRE HYDRANT

N.T.S.

HORROCKS ENGINEERS

DATE: JANUARY 2020

HORROCKS ENGINGEERS
728 WEST 100 SOUTH #2
HEBER CITY, UTAH 84032
(435) 654-2226

MIDWAY CITY
75 NORTH 100 WEST
PO BOX 277
MIDWAY, UTAH 84049
(435) 654-3223

MIDWAY CITY STANDARD DRAWING

WATER - 1

H:\Midway City\Standard Drawings\2020 Standards\DRAWINGS\WATER-1.dwg - Layout1 - 1/28/2020 09:54am, natalier

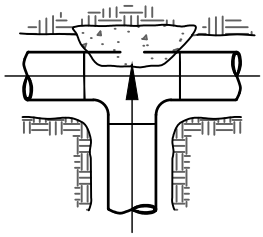

CONDITION 1

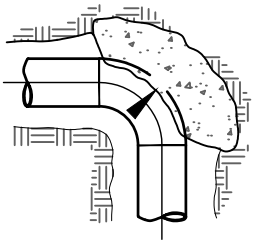

CONDITION 2

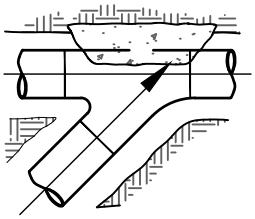

CONDITION 3

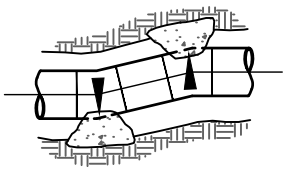

CONDITION 4

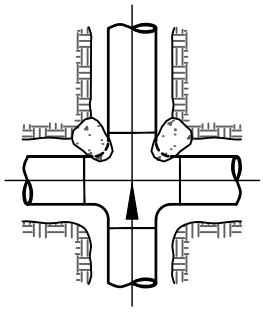

CONDITION 5
(AT ENGINEER DISCRETION)

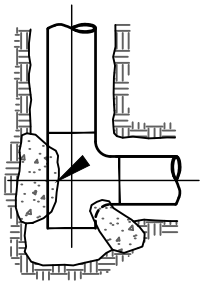

CONDITION 6

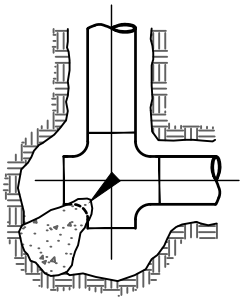

CONDITION 7

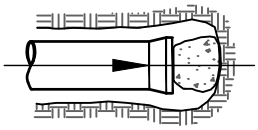

CONDITION 8

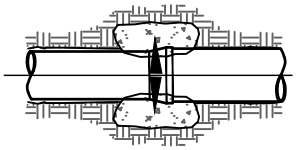

CONDITION 9

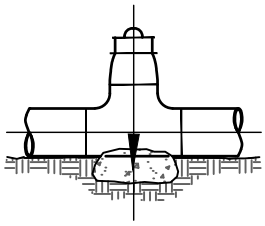

ANCHOR REQ'D FOR
VALVES 12" OR LARGER

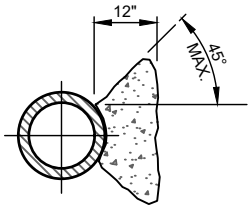

TYPICAL SECTION
THRU THRUST BLOCK

THRUST BLOCK BEARING AREA IN SQ. FT.									
PIPE SIZE	CONDITION								
	1	2	3	4	5	6	7	8	9
4	2.6	3.3	2.6	1.3	1.3	2.0	3.3	2.6	1.3
6	4.6	6.5	3.9	2.0	2.6	3.3	6.5	4.6	2.0
8	7.8	11.0	5.9	3.3	3.9	5.9	11.0	7.8	3.3
10	12.4	17.5	9.8	5.2	6.5	9.1	17.5	12.4	5.2
12	17.5	24.8	13.6	7.8	9.1	12.3	24.8	17.5	7.8
14	24.0	33.8	18.2	9.7	12.3	16.9	33.8	24.0	9.7
16	31.1	44.0	23.8	12.7	15.5	23.2	44.0	31.1	12.7
20	48.6	68.8	37.2	19.8	24.2	36.3	68.8	48.6	19.8
24	89.8	90.1	48.8	24.9					24.9

NOTES:
1. ALL THRUST BLOCK BEARING FACES SHALL BE POURED AGAINST UNDISTURBED SOIL OR APPROVED COMPACTED BACKFILL.
2. CONCRETE SHALL BE CLASS 6.0-B-3000. SEE SECTION 03304-2.06.
3. ALL THRUST BLOCK SIDES SHALL BE FORMED.
4. CALCULATED ON 225 LB. TEST PRESSURE AND ALLOWABLE BEARING PRESSURE OF 2000 LBS. PER SQUARE FEET.
5. IN POORER SOILS SPECIAL DESIGN IS REQUIRED.

W2 / TYP — TYPICAL PIPE THRUST BLOCKING
N.T.S.

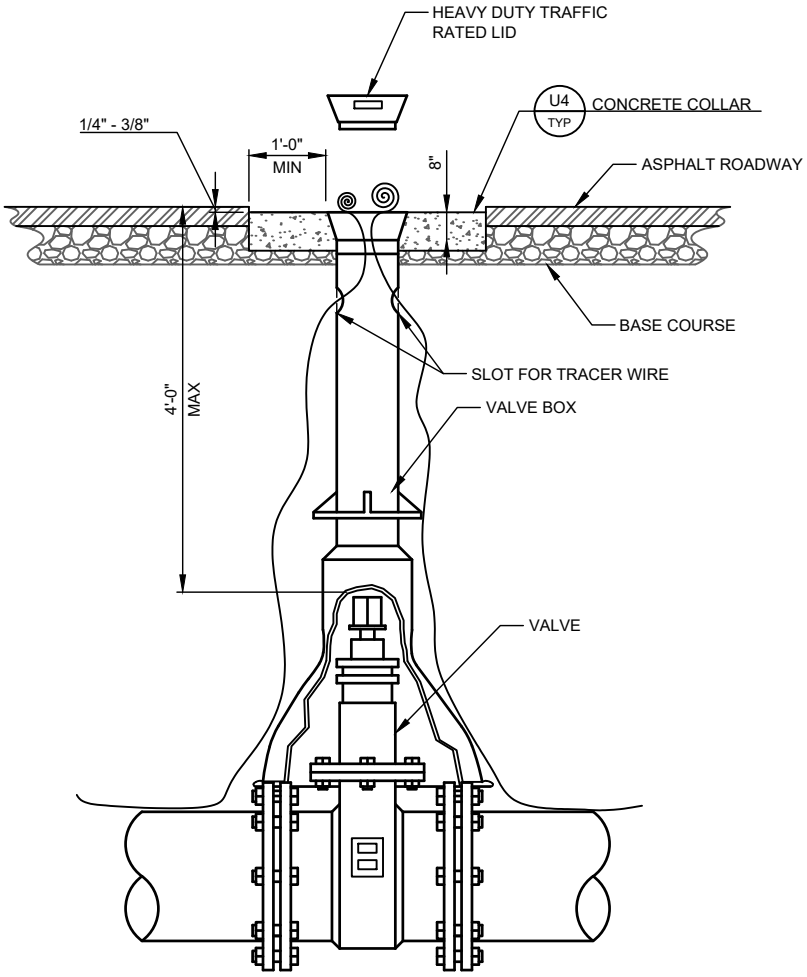

ALL IRRIGATION VALVE LIDS SHALL BE TRIANGULAR STYLE AND LABELED "IRRIGATION"

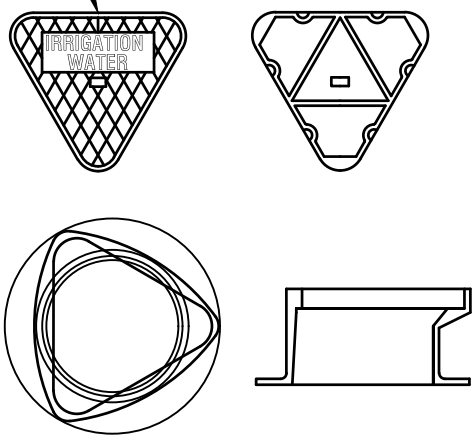

NOTES:

1. RAISE VALVE BOX TO GRADE AFTER PAVING OPERATIONS ARE COMPLETED.
2. INSTALL VALVE EXTENSION IF OPERATING NUT GREATER THAN 4 FEET BELOW THE LID.

W3 TYP — VALVE BOX COLLAR

N.T.S.

HORROCKS ENGINEERS

DATE: JANUARY 2020

HORROCKS ENGINGEERS
728 WEST 100 SOUTH #2
HEBER CITY, UTAH 84032
(435) 654-2226

MIDWAY CITY
75 NORTH 100 WEST
PO BOX 277
MIDWAY, UTAH 84049
(435) 654-3223

MIDWAY CITY STANDARD DRAWING

WATER - 3

H:\Midway City\Standard Drawings\2020 Standards\DRAWINGS\WATER-3.dwg - Layout1 - 1/28/2020 09:54am, natalier

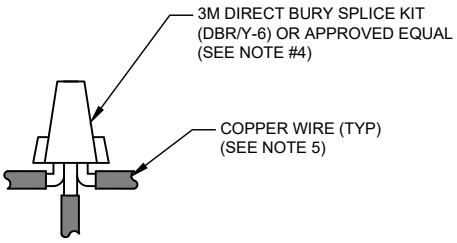

SPLICE DETAIL

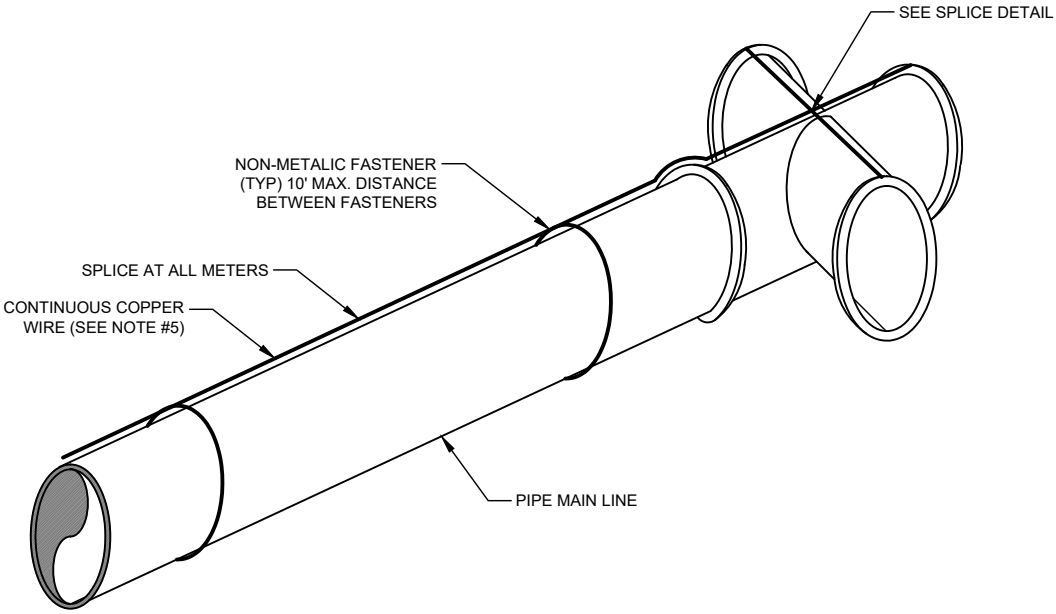

NOTES:

1. COPPER TRACER WIRE TO BE INSTALLED THE LENGTH OF PIPELINE AND EACH CULINARY SERVICE, AND SECONDARY SERVICE, ALONG EACH PRESSURIZED IRRIGATION PIPELINE AND SERVICE. TRACER WIRE TO BE BROUGHT UP IN AT LEAST ONE VALVE IN EACH INTERSECTION. TRACER WIRE TO BE BROUGHT TO THE END OF EACH FIRE HYDRANT ON CULINARY LINES. (NOT TO EXCEED 500 FEET).
2. TRACER WIRE TO BE INSTALLED ALONG EACH WATER SERVICE TO THE METER CAN.
3. TRACER WIRE TO BE INSTALLED AND MAINTAINED ON TOP OF PIPE CENTERLINE DURING BACKFILL.
4. SPLICE KIT USED TO ELECTRICALLY CONNECT TWO OR MORE PRESTRIPPED COPPER WIRES AND MOISTURE SEAL THE CONNECTION FOR DIRECT BURIAL. THE KIT SHALL INCLUDE A 3M (OR APPROVED EQUAL) PERFORMANCE PLUS WIRE CONNECTOR AND A HIGH IMPACT, UV RESISTANT POLYPROPYLENE TUBE PREFILLED WITH MOISTURE-RESISTANT GREASE.
5. COPPER WIRE SHALL BE #12 AWG SOLID UF TYPE WITH CROSS-LINKED POLYETHYLENE INSULATION.
6. CONTRACTOR SHALL TEST TRACER WIRE FOR CONTINUITY PRIOR TO PAVING IN THE PRESENCE OF THE ENGINEER.
7. THE TEE/CROSS IS SHOWN WITHOUT VALVES AND IS INTENDED TO SHOW TRACER WIRE ROUTING ONLY.
8. ALL PIPE COUPLINGS AND FITTINGS ARE REQUIRED TO BE NEW MEGALUG RESTRAINED JOINT FITTINGS ON PIPE MAIN LINE.

W4 TYP — TRACER WIRE INSTALLATION

N.T.S.

HORROCKS ENGINEERS

DATE: JANUARY 2020

HORROCKS ENGINGEERS
728 WEST 100 SOUTH #2
HEBER CITY, UTAH 84032
(435) 654-2226

MIDWAY CITY
75 NORTH 100 WEST
PO BOX 277
MIDWAY, UTAH 84049
(435) 654-3223

MIDWAY CITY
STANDARD DRAWING

WATER - 4

H:\Midway City\Standard Drawings\2020 Standards\DRAWINGS\WATER-4.dwg - Layout1 - 1/28/2020 09:54am, natalier

TABLE 1

METER SIZE	MODEL
3/4"	VBHC72-24W
1"	VBHC74-24W

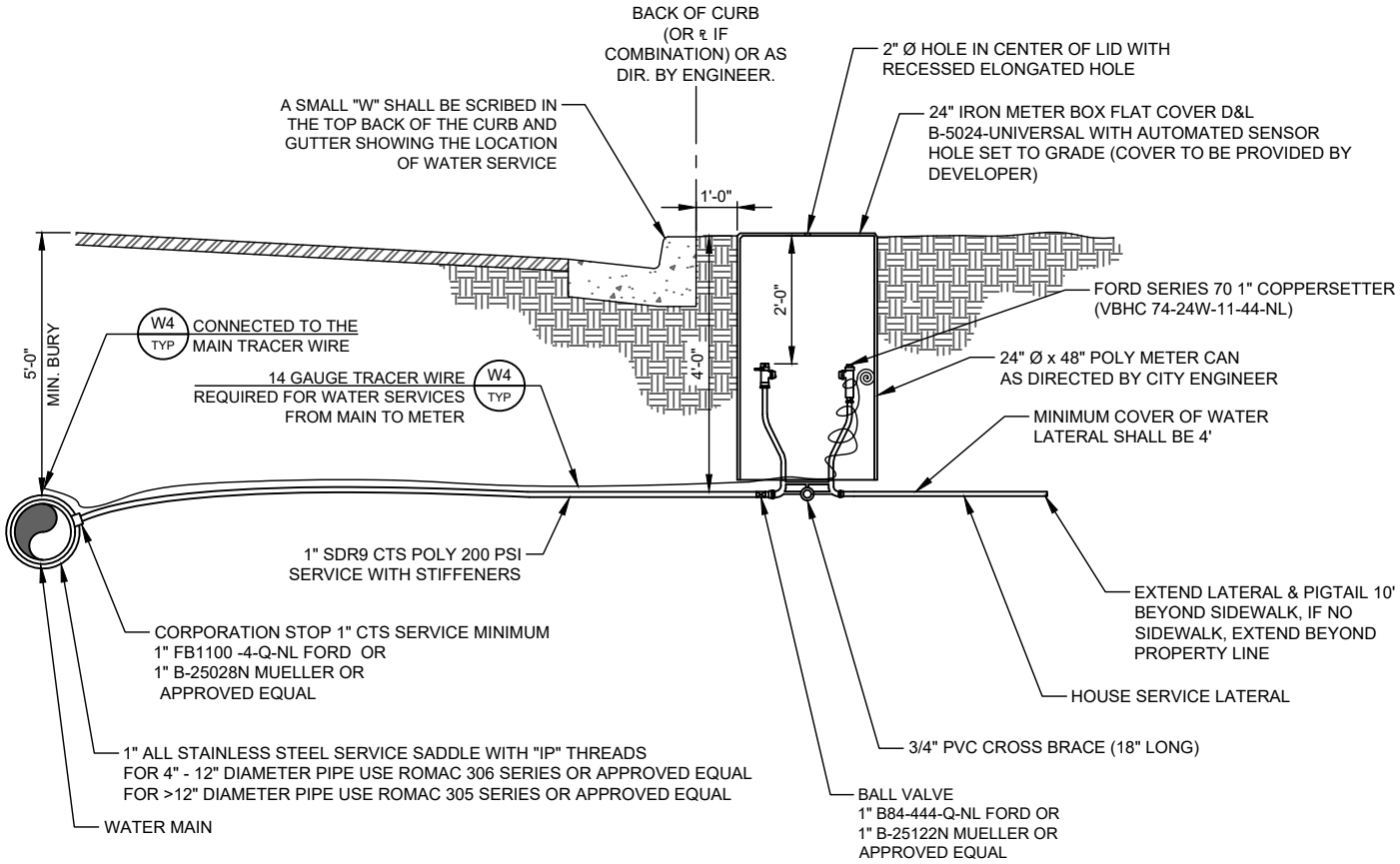

NOTES:

1. METER BOX, COVER, COPPERSETTER, CORPORATION STOP, & SERVICE LINES TO BE FURNISHED AND INSTALLED BY CONTRACTOR/ DEVELOPER.
2. STAINLESS STEEL STIFFENERS ON ALL POLY CONNECTIONS.
3. BALL VALVE SHALL BE ACCESSIBLE FROM INSIDE CAN.
4. WATER METER WILL NOT BE INSTALLED IF METER CAN IS INSTALLED INCORRECTLY OR IN A DRIVEWAY.
5. METER IS THE ONLY PART THAT IS PROVIDED BY THE CITY.

W5 TYP

WATER SERVICE CONNECTION

N.T.S.

HORROCKS ENGINEERS

DATE: JANUARY 2020

HORROCKS ENGINGEERS
728 WEST 100 SOUTH #2
HEBER CITY, UTAH 84032
(435) 654-2226

MIDWAY CITY
75 NORTH 100 WEST
PO BOX 277
MIDWAY, UTAH 84049
(435) 654-3223

MIDWAY CITY STANDARD DRAWING

WATER - 5

H:\Midway City\Standard Drawings\2020 Standards\DRAWINGS\WATER-5.dwg - Layout1 - 1/28/2020 09:54am, natalier

TABLE 1

METER SIZE	MODEL
1 1/2"	VBHH77-24
2"	VBHH76-24

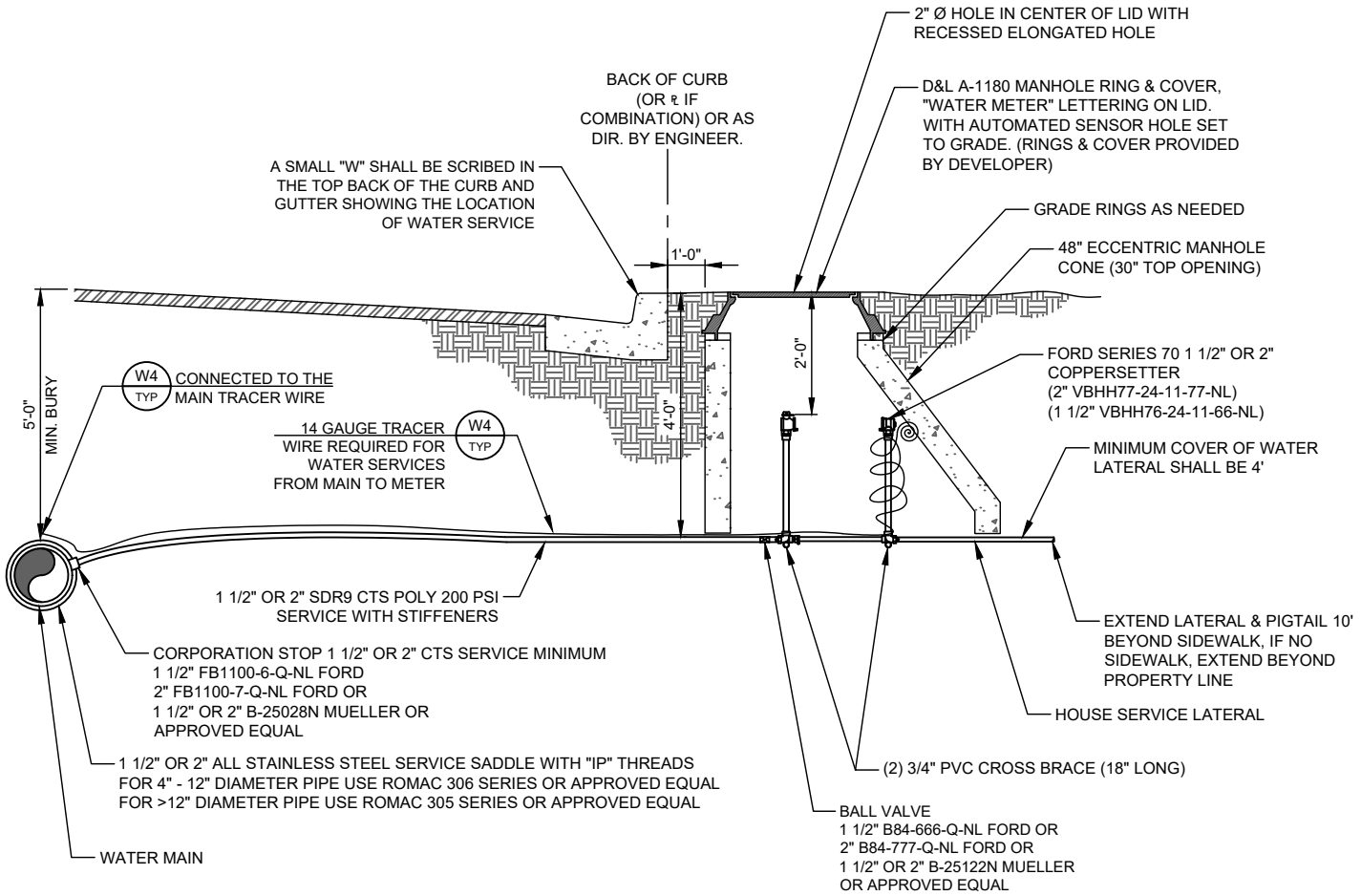

NOTES:

1. METER BOX, COVER, COPPERSETTER, CORPORATION STOP, & SERVICE LINES TO BE FURNISHED AND INSTALLED BY CONTRACTOR/ DEVELOPER.
2. STAINLESS STEEL STIFFENERS ON ALL POLY CONNECTIONS.
3. BALL VALVE SHALL BE ACCESSIBLE FROM INSIDE CAN.
4. WATER METER WILL NOT BE INSTALLED IF METER CAN IS INSTALLED INCORRECTLY OR IN A DRIVEWAY.
5. METER IS THE ONLY PART THAT IS PROVIDED BY THE CITY.

W6 TYP

1 1/2" AND 2" WATER SERVICE CONNECTION

N.T.S.

HORROCKS ENGINEERS

DATE: JANUARY 2020

HORROCKS ENGINGEERS
728 WEST 100 SOUTH #2
HEBER CITY, UTAH 84032
(435) 654-2226

MIDWAY CITY
75 NORTH 100 WEST
PO BOX 277
MIDWAY, UTAH 84049
(435) 654-3223

MIDWAY CITY STANDARD DRAWING

WATER - 6

H:\Midway City\Standard Drawings\2020 Standards\DRAWINGS\WATER-6.dwg - Layout1 - 1/28/2020 09:54am, natalier

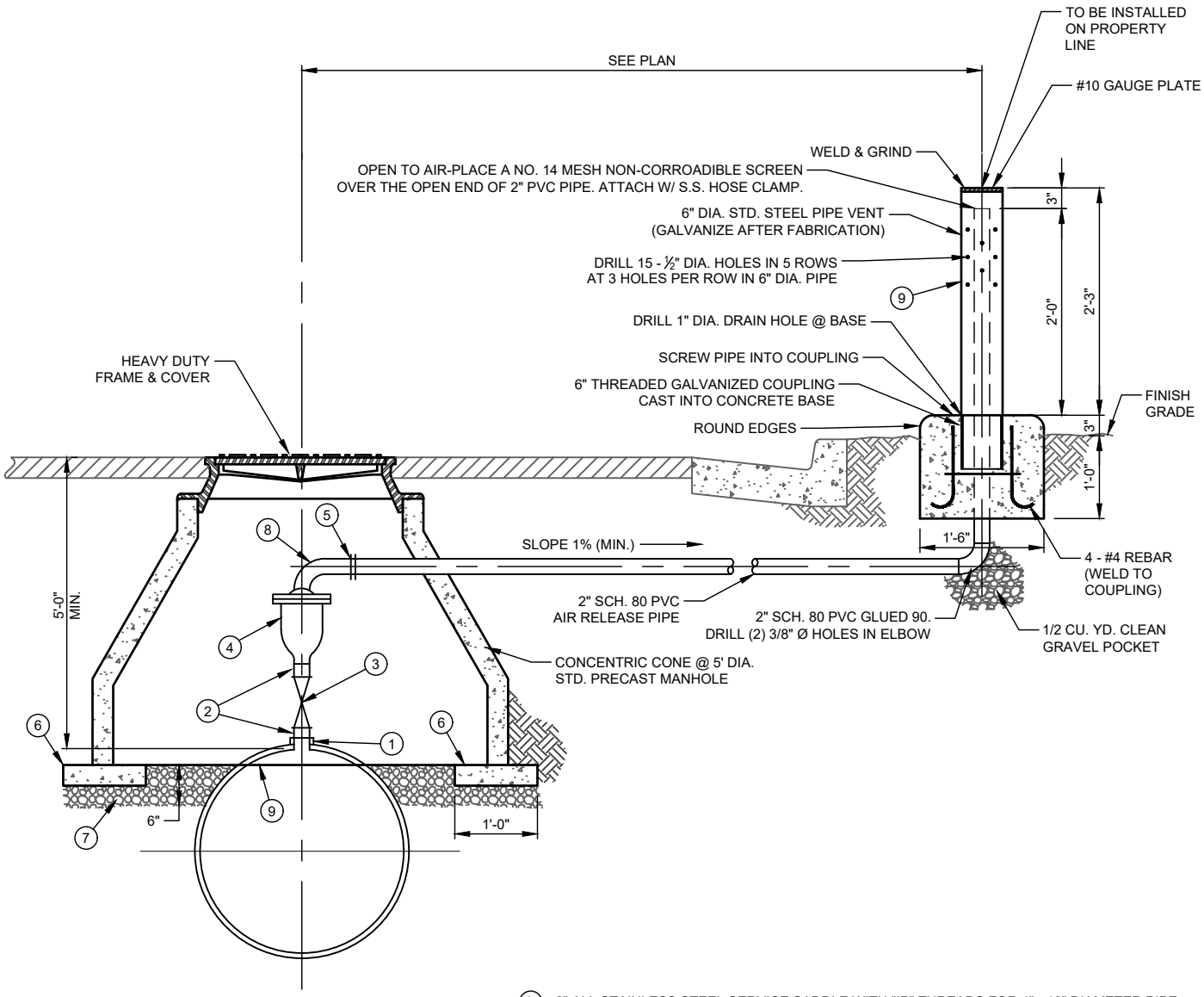

1. 2" ALL STAINLESS STEEL SERVICE SADDLE WITH "IP" THREADS FOR 4" - 12" DIAMETER PIPE USE ROMAC 306 SERIES OR APPROVED EQUAL FOR >12" DIAMETER PIPE USE ROMAC 305 SERIES OR APPROVED EQUAL
2. BRASS NIPPLE THR. (MALE) ALLOW FOR VALVE HANDLE TO OPERATE
3. 2" THREADED BRASS BALL VALVE
4. 2" THREADED AIR & VACUUM VALVE EQUAL TO APCO MODEL145C (2") OR A.R.I. D-040-C (2") DUCTILE IRON SHELL & BASE
5. PVC UNION
6. CONTINUOUS CONCRETE BASE - 1'-0" x 4"
7. 6" UBC - COMPACT TO 95%
8. 2" BRASS STREET 90 WITH ADAPTER TO SCH. 80 PVC
9. NOTCH TO MATCH PIPE

W7 / TYP

AIR/ VAC RELEASE STATION

N.T.S.

HORROCKS ENGINEERS

DATE: JANUARY 2020

HORROCKS ENGINGEERS
728 WEST 100 SOUTH #2
HEBER CITY, UTAH 84032
(435) 654-2226

MIDWAY CITY
75 NORTH 100 WEST
PO BOX 277
MIDWAY, UTAH 84049
(435) 654-3223

MIDWAY CITY STANDARD DRAWING

WATER - 7

H:\Midway City\Standard Drawings\2020 Standards\DRAWINGS\WATER-7.dwg - Layout1 - 1/28/2020 09:54am, natalier

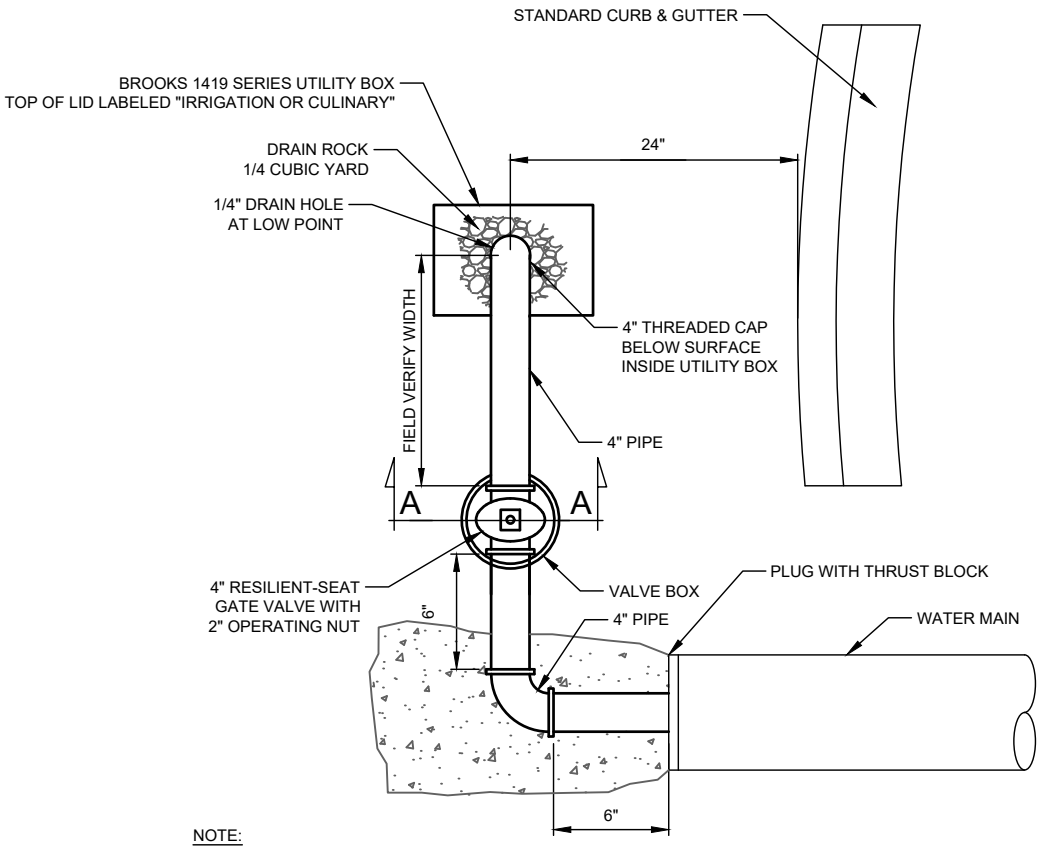

NOTE:
ALL PIPES AND FITTINGS TO BE
BRASS OR STAINLESS STEEL.

PLAN VIEW

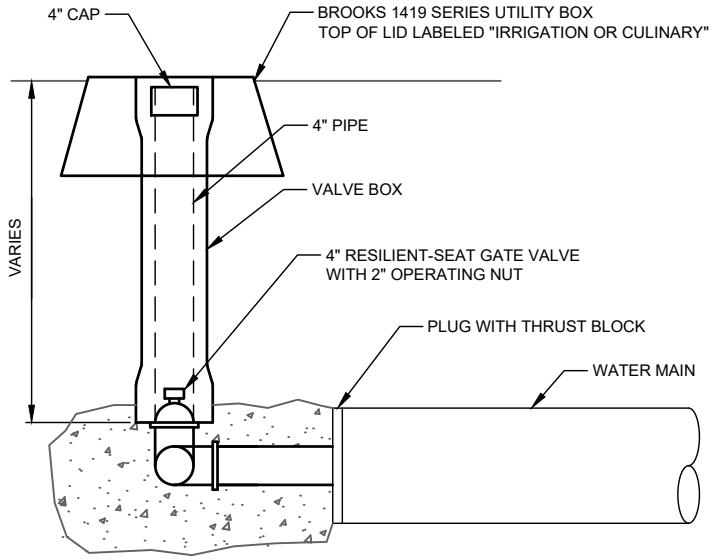

SECTION A-A

W8 TYP — TEMPORARY FLUSH VALVE
N.T.S.

HORROCKS ENGINEERS

DATE: JANUARY 2020

HORROCKS ENGINGEERS
728 WEST 100 SOUTH #2
HEBER CITY, UTAH 84032
(435) 654-2226

MIDWAY CITY
75 NORTH 100 WEST
PO BOX 277
MIDWAY, UTAH 84049
(435) 654-3223

MIDWAY CITY STANDARD DRAWING

WATER - 8

H:\Midway City\Standard Drawings\2020 Standards\DRAWINGS\WATER-8.dwg - Layout1 - 1/28/2020 09:54am, natalier

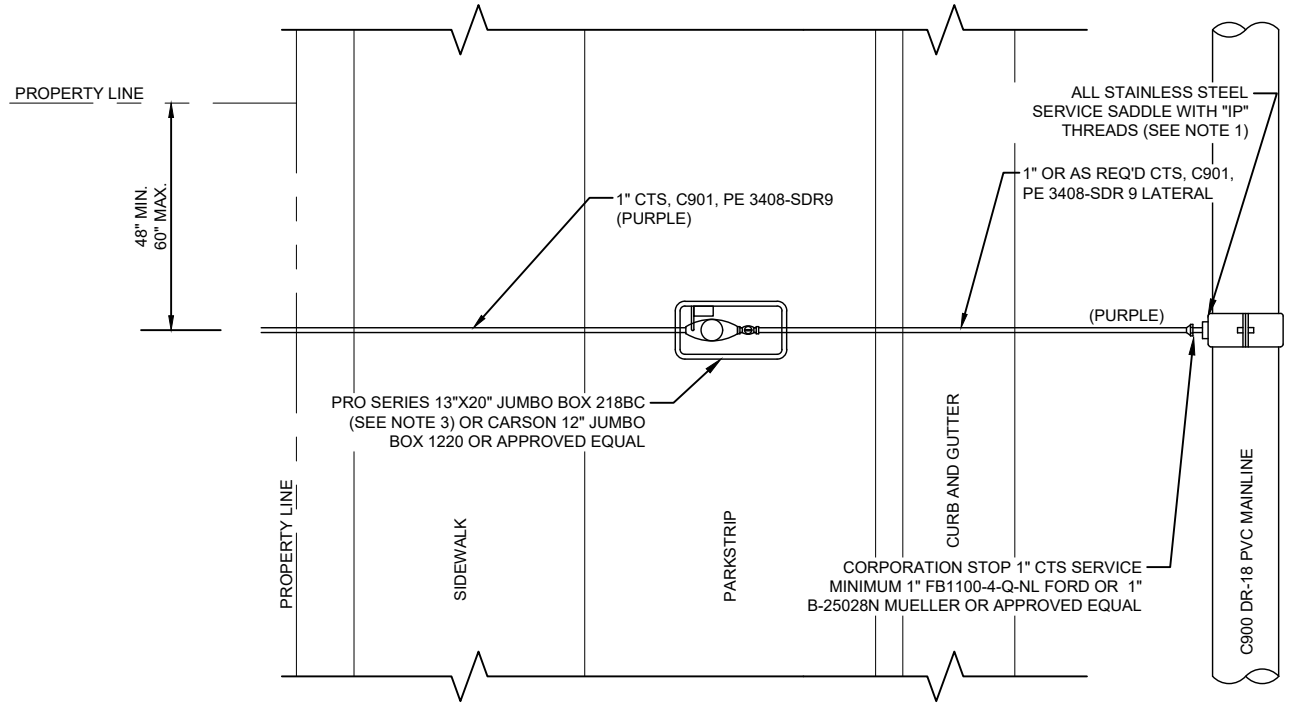

PLAN

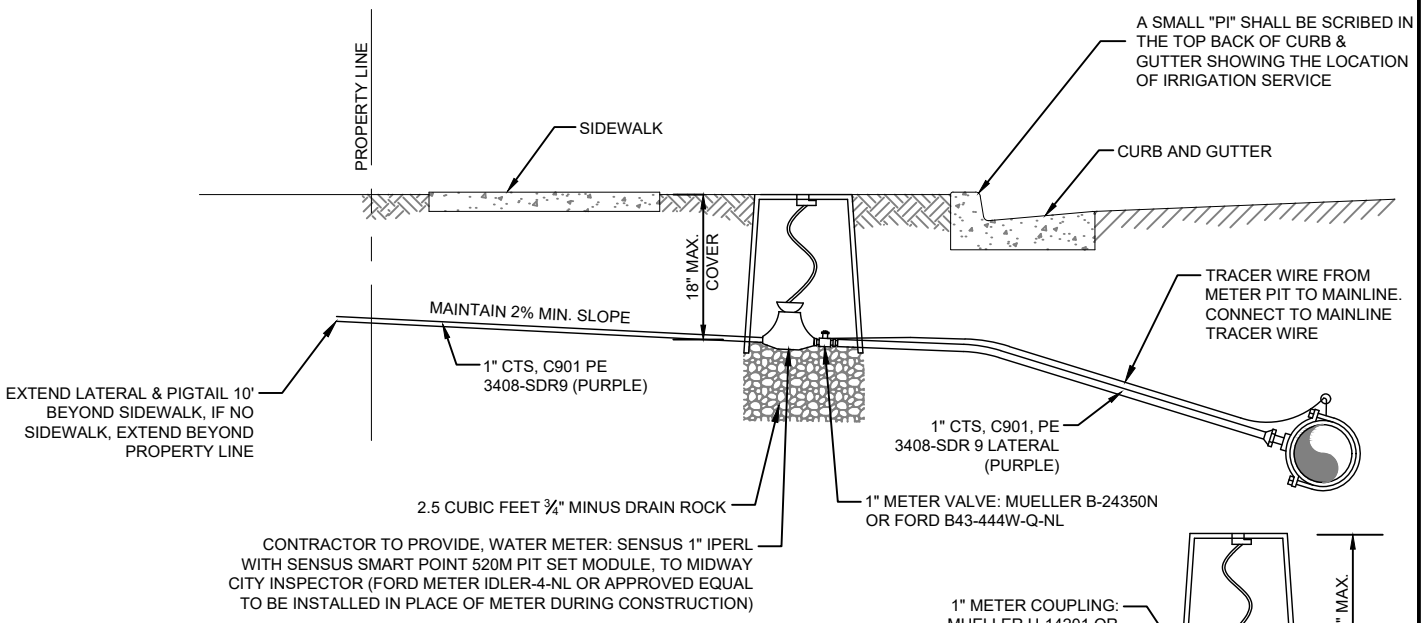

PROFILE

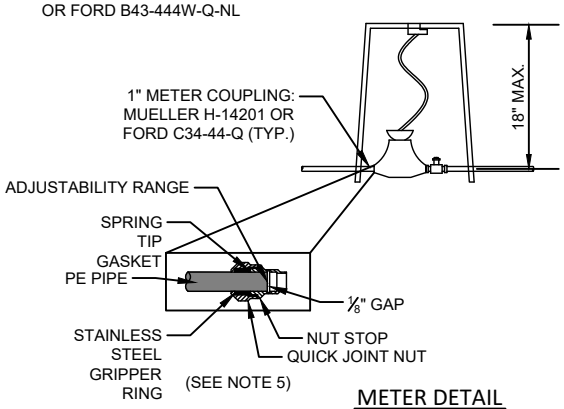

METER DETAIL

NOTES:

1. CONSULT MIC ENGINEER FOR MAINLINE PIPE SIZES GREATER THAN 12" OR FOR MAINLINE PIPE MATERIAL OTHER THAN C900 PVC. HOT TAPPING NOT ALLOWED. ALL STAINLESS STEEL SERVICE SADDLE WITH "IP" THREADS FOR 4" - 12" DIAMETER PIPE USE ROMAC 306 SERIES OR APPROVED EQUAL. FOR >12" DIAMETER PIPE USE ROMAC 305 SERIES OR APPROVED EQUAL.
2. METER & ENCLOSURE SHALL BE LOCATED BEHIND CURB WITHIN STREET R.O.W. OR PUBLIC UTILITY EASEMENT IF NO CURB OR GUTTER EXISTS.
3. INSURE VALVE CONTROL NUT CAN BE SERVICED BY WRENCH WHEN POSITIONING UNDER ENCLOSURE LID.
4. ALL COMPRESSION-TYPE CONNECTIONS REQUIRE STAINLESS STEEL INSERT STIFFENERS.
5. THE TUBING SHOULD BE INSERTED INTO THE FITTING SO THAT THE END OF THE TUBING IS WELL PAST THE RUBBER GASKET AND AT LEAST ⅛" FROM THE BOTTOM OF THE SOCKET.
6. ALL WORK SHALL BE INSPECTED & APPROVED BY MIC INSPECTOR PRIOR TO BACKFILL. ALL INSPECTIONS SHALL BE COORDINATED 24 HOURS IN ADVANCE.
7. TRACER WIRE REQUIRED ON MAINLINE AND SERVICE LATERALS.

IR1
TYP

SINGLE IRRIGATION
SERVICE CONNECTION

N.T.S.

HORROCKS ENGINEERS

DATE:
JANUARY 2020

HORROCKS ENGINGEERS
728 WEST 100 SOUTH #2
HEBER CITY, UTAH 84032
(435) 654-2226

MIDWAY CITY
75 NORTH 100 WEST
PO BOX 277
MIDWAY, UTAH 84049
(435) 654-3223

MIDWAY CITY
STANDARD DRAWING

IRRIGATION - 1

H:\Midway City\Standard Drawings\2020 Standards\DRAWINGS\IRRIGATION 1 AND 2.dwg - IRRIGATION 1 - 1/28/2020 09:55am, natalier

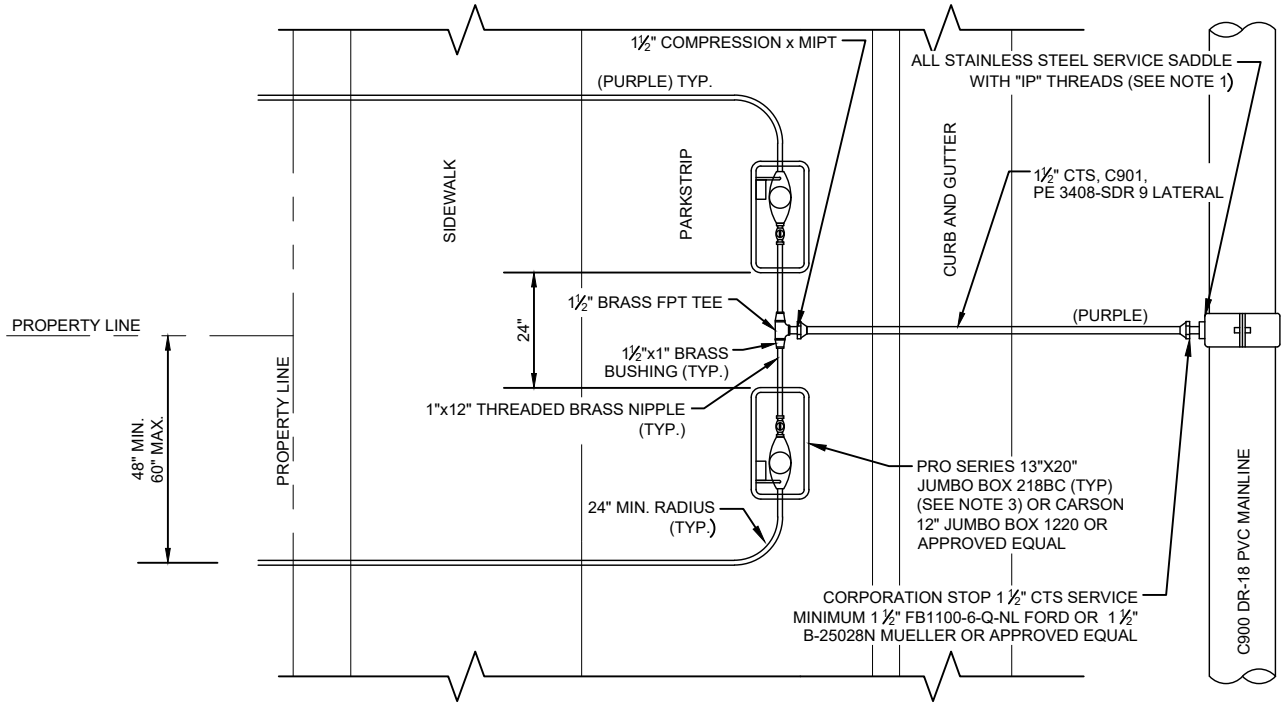

PLAN

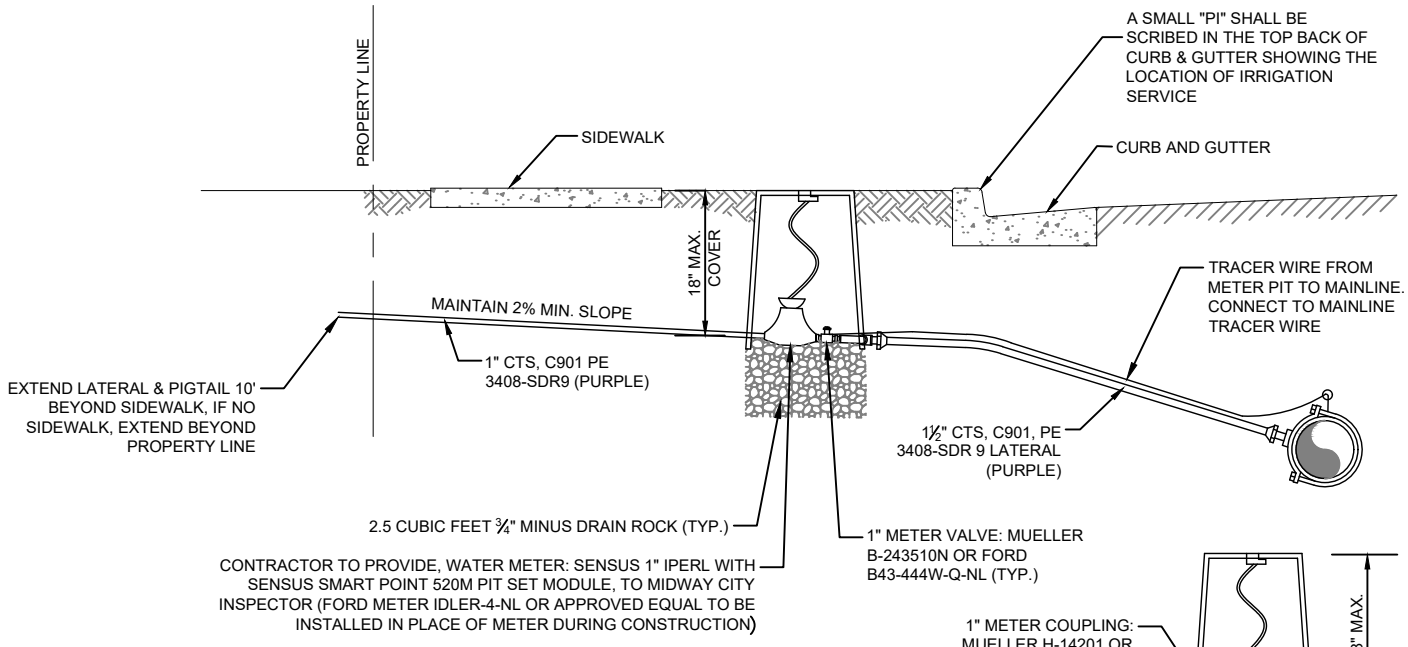

PROFILE

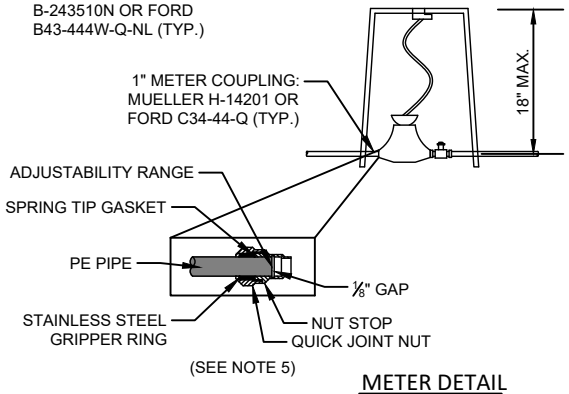

METER DETAIL

NOTES:

1. CONSULT MIC ENGINEER FOR MAINLINE PIPE SIZES GREATER THAN 12" OR FOR MAINLINE PIPE MATERIAL OTHER THAN C900 PVC. HOT TAPPING NOT ALLOWED. ALL STAINLESS STEEL SERVICE SADDLE WITH "IP" THREADS. FOR 4" - 12" DIAMETER PIPE USE ROMAC 306 SERIES OR APPROVED EQUAL. FOR >12" DIAMETER PIPE USE ROMAC 305 SERIES OR APPROVED EQUAL.
2. METER & ENCLOSURE SHALL BE LOCATED BEHIND CURB WITHIN STREET R.O.W. OR PUBLIC UTILITY EASEMENT IF NO CURB OR GUTTER EXISTS.
3. INSURE VALVE CONTROL NUT CAN BE SERVICED BY WRENCH WHEN POSITIONING UNDER ENCLOSURE LID.
4. ALL COMPRESSION-TYPE CONNECTIONS REQUIRE STAINLESS STEEL INSERT STIFFENERS.
5. THE TUBING SHOULD BE INSERTED INTO THE FITTING SO THAT THE END OF THE TUBING IS WELL PAST THE RUBBER GASKET AND AT LEAST ⅛" FROM THE BOTTOM OF THE SOCKET.
6. ALL WORK SHALL BE INSPECTED & APPROVED BY MIC INSPECTOR PRIOR TO BACKFILL. ALL INSPECTIONS SHALL BE COORDINATED 24 HOURS IN ADVANCE.
7. TRACER WIRE REQUIRED ON MAINLINE AND SERVICE LATERALS.

IR2 TYP

DOUBLE IRRIGATION SERVICE CONNECTION

N.T.S.

HORROCKS ENGINEERS

DATE: JANUARY 2020

HORROCKS ENGINGEERS
728 WEST 100 SOUTH #2
HEBER CITY, UTAH 84032
(435) 654-2226

MIDWAY CITY
75 NORTH 100 WEST
PO BOX 277
MIDWAY, UTAH 84049
(435) 654-3223

MIDWAY CITY STANDARD DRAWING

IRRIGATION - 2

H:\Midway City\Standard Drawings\2020 Standards\DRAWINGS\IRRIGATION 1 AND 2.dwg - IRRIGATION 2 - 1/28/2020 09:55am, natalier

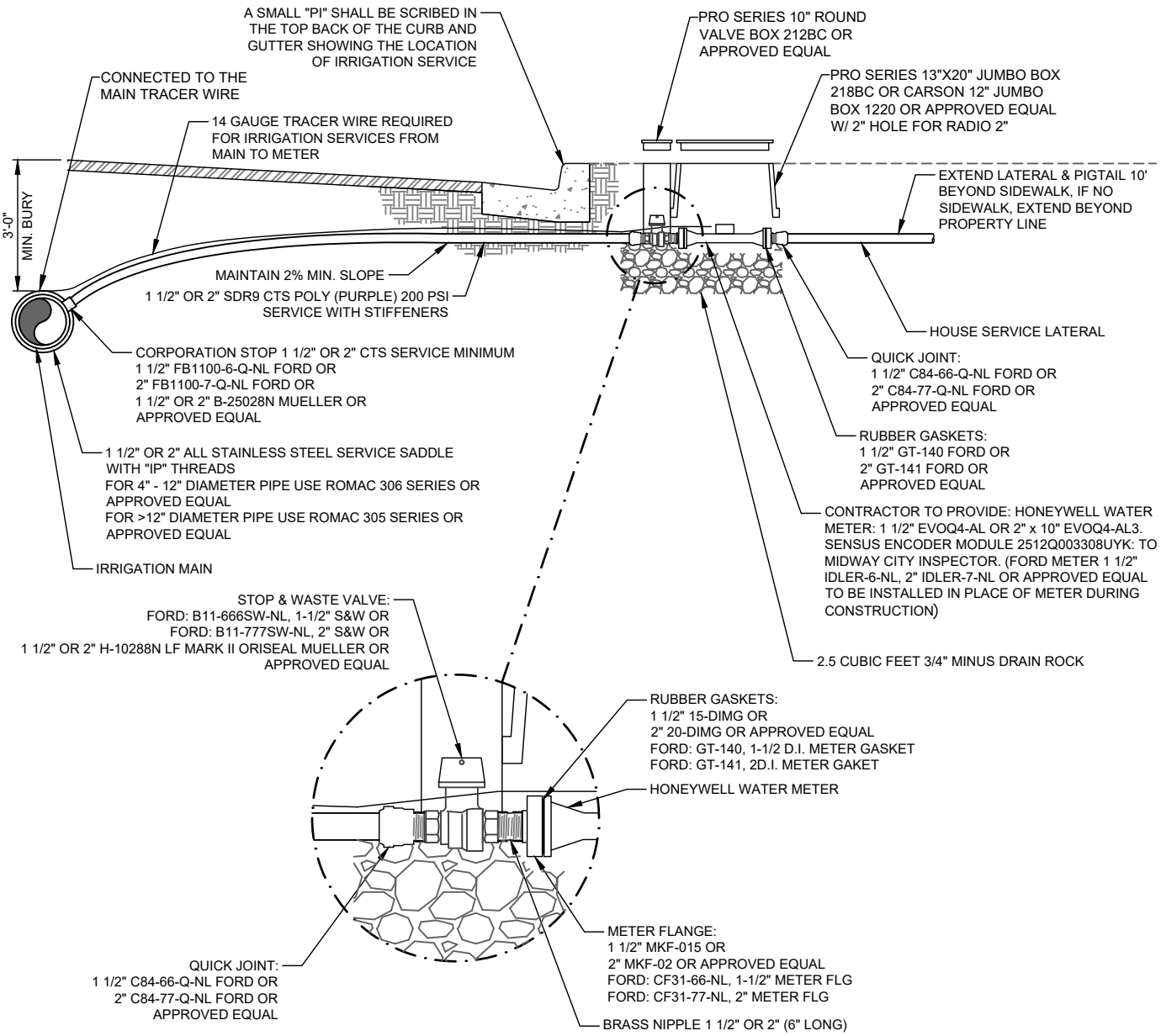

NOTES:

1. METER BOX AND COVER, CORPORATION STOP, & SERVICE LINES TO BE FURNISHED AND INSTALLED BY CONTRACTOR/ DEVELOPER.
2. STAINLESS STEEL STIFFENERS ON ALL POLY CONNECTIONS.
3. BALL VALVE SHALL BE ACCESSIBLE FROM INSIDE10" VALVE BOX.
4. IRRIGATION METER WILL NOT BE INSTALLED IF 10" VALVE BOX AND METER BOX IS INSTALLED INCORRECTLY OR IN A DRIVEWAY.
5. METER TO BE INSTALLED OFF OF THE GROUND.

IR3 / TYP

1 1/2" AND 2" IRRIGATION SERVICE CONNECTION

N.T.S.

HORROCKS ENGINEERS

DATE: JANUARY 2020

HORROCKS ENGINGEERS
728 WEST 100 SOUTH #2
HEBER CITY, UTAH 84032
(435) 654-2226

MIDWAY CITY
75 NORTH 100 WEST
PO BOX 277
MIDWAY, UTAH 84049
(435) 654-3223

MIDWAY CITY STANDARD DRAWING

IRRIGATION - 3

H:\Midway City\Standard Drawings\2020 Standards\DRAWINGS\IRRIGATION-3.dwg - Layout1 - 1/28/2020 09:55am, natalier

RESOLUTION
2020-02

A RESOLUTION BY THE MIDWAY CITY COUNCIL ADOPTING AN UPDATED STANDARD SPECIFICATIONS AND DRAWINGS FOR THE CITY OF MIDWAY

WHEREAS, Utah Code Sections 10-8-8 and 10-8-14 authorizes municipalities to construct, maintain and operate water works, streets, parks, and other infrastructure; and

WHEREAS, the Midway City Council finds it in the public interest at this time to adopt updated standard specifications and drawings related to such infrastructure as recommended by its City Engineer and Public Works Department.

NOW THEREFORE, be it hereby RESOLVED by the City Council of Midway City, Utah, as follows:

Section 1: The updated standard specifications and drawings attached hereto as Exhibit A are hereby adopted as the current Standard Specifications and Drawings for the City of Midway.

PASSED AND ADOPTED by the Midway City Council on the 18th day of February 2020.

MIDWAY CITY

Celeste Johnson, Mayor

ATTEST:

Brad Wilson, Recorder

(SEAL)

Exhibit A