Construction Specifications

Midway Sanitation District

April 2014

HORROCKS
ENGINEERS

Construction Specifications

Table of Contents

Section I:	**General Improvement Requirements**	Page 1
	A. Scope	Page 1
	B. Preliminary Drawings	Page 1
	C. Construction Drawings	Page 1
	D. Standards for Construction Drawings	Page 1
	E. Record Drawings	Page 3
	F. Inspection	Page 3
	G. Requests for Inspection	Page 3
	H. Construction Completion Inspection	Page 3
	I. Guarantee of Work	Page 3
	J. Easements	Page 4
Section II:	**Earthwork**	Page 5
	A. Scope	Page 5
	B. Excavation for Structures	Page 5
	C. Backfill Around Structures	Page 5
	D. Compacting Earth Materials	Page 5
	E. Work within Public Right-Of-Way	Page 6
Section III:	**Portland Cement Concrete**	Page 7
	A. Scope	Page 7
	B. Materials	Page 7
	C. Concrete Mix	Page 7
	D. Forms	Page 8
	E. Preparations	Page 8
	F. Concrete Mixing	Page 9
	G. Depositing	Page 9
	H. Placing Concrete in Cold Weather	Page 9
	I. Finishing	Page 10
	J. Curing and Protection	Page 10
Section IV:	**Excavation and Backfill For Pipelines**	Page 11
	A. Scope	Page 11
	B. Control of Ground water	Page 11
	C. Excavation for Pipelines	Page 11
	D. Subgrade Foundation for Pipe	Page 11
	E. Blasting	Page 12
	F. Sheeting, Bracing and Shoring of Excavations	Page 12
	G. Backfilling	Page 12
	H. Consolidation of Backfill	Page 13
	I. Compaction of Backfill	Page 13
	J. Imported Backfill Material	Page 13
	K. Disposal of Excess Materials	Page 13

Section V:	**Sewer Pipe**		Page 14
	A.	Scope	Page 14
	B.	Pipe	Page 14
	C.	Service Laterals	Page 14
	D.	Pipe Laying	Page 15
	E.	Tracer Wire Installation	Page 15
	F.	Subgrade Foundation for Pipe	Page 16
	G.	Installation Requirements for Line and Grade	Page 16
	H.	Pipe Bedding	Page 17
	I.	Tests	Page 17
	J.	Pressure Sewer Main Lines	Page 21
	K.	Off-Road Sewer Lines	Page 21
Section VI:	**Manholes**		Page 22
	A.	Scope	Page 22
	B.	Concrete Bases	Page 22
	C.	Wall and Cone Sections	Page 22
	D.	Iron Castings	Page 23
	E.	Spacing	Page 23
	F.	Drop Manholes	Page 23
	G.	Off-Road Manholes	Page 23
	H.	Off-Road Manholes Marker	Page 23
	I.	Leakage Testing	Page 23
	J.	Grease Interceptor	Page 24
Section VII:	**Ductile Iron Pipe and Fittings**		Page 25
	A.	Scope	Page 25
	B.	Ductile Iron	Page 25
	C.	Ductile Iron Fittings	Page 25
	D.	Coating and Linings for Ductile Iron Pipe and Fitting Page	Page 25
	E.	Handling Ductile Iron Pipe and Fittings	Page 25
	F.	Cutting, Cleaning and Inspection	Page 25
	G.	Pipe Installation	Page 25
Standard Drawings			Page 27

CONSTRUCTION SPECIFICATIONS

I. GENERAL IMPROVEMENT REQUIREMENTS

This Document serves as a General Specification and is not intended to be a complete set of specifications and details for individual projects. For Contract Projects, specific contract documents including special provisions, general conditions and site specific details are required. The Midway Sanitation District Construction Specifications will augment said contract documents.

A. **SCOPE:** This Section defines the general requirements for improvements to be built by the Developer. The improvements include all sewer improvements in front of all lots and along all dedicated streets to a connection with existing improvements of the same kind or the boundary of the subdivision nearest existing improvements. Layout must provide for future extension to adjacent development and be compatible with the contour of the ground for proper drainage. All sewer lines shall be installed to the boundary lines of the subdivision.

B. **PRELIMINARY DRAWINGS:** One set of preliminary design drawings shall be submitted to the District for review and approval. The review shall be provided at the cost of the Developer until the project is accepted by the District. The preliminary design shall include: site location map, existing and proposed sewer layout including mainlines, manholes, and laterals in relation to existing streets and utilities, water lines, property lines, etc. The preliminary design shall include the estimated maximum number of units to be serviced by the proposed system or project acreage. A master plan shall be included when applicable. Size of drawings shall be 22" x 34" (Trim line) with ½" border on top, bottom and right sides. Left side border shall be 1 ½". One set of half-size drawings shall also be submitted.

C. **CONSTRUCTION DRAWINGS:** Complete and detailed construction plans and drawings of sewer improvements shall be submitted to the District Engineer prior to commencing construction. No construction shall be started until the plans have been approved by the District Engineer, and a bond has been submitted and approved by the District.

D. **STANDARDS FOR CONSTRUCTION DRAWINGS:** The following instructions are for the purpose of standardizing the preparation of drawings to obtain uniformity in appearance, clarity, size and style.

1. The construction plans shall be submitted in triplicate (minimum) with (2) sets to be retained by the District Engineer and one set returned to the Developer with the approval mark of the District Engineer. This approved set shall be kept available at the construction site.

2. These plans and designs shall meet the standards defined in the Specifications and Drawings hereinafter outlined. The minimum information required on drawings for improvements are as follows:

a. All drawings and/or prints shall be clear and legible and conform to good engineering and drafting room practice. Size of drawings shall be 22" x 34" (Trim line) with ½" border on top, bottom and right sides. Left side border shall be 1 ½", and one half-size drawing.

b. In general, the following shall be included on drawings:

   1. North arrow (plan)
   2. Scale and elevations referenced to U.S.G.S. datum
   3. Stationing and elevations for profiles
   4. Title block, located in lower right corner of sheet, to include:
      - Name of City and/or District.
      - Project title (subdivision, etc.).
      - Specific type and location of work.
      - Space for approval signature of District Engineer and date.
      - Name of engineer or firm preparing drawings with license number.

c. Sewer drawings shall show:

   1. Scale: 1"=50' or 1"=100' horizontal; 1"=5' or 1"=10' vertical.
   2. Location, size and grade of mains.
   3. Manhole size, location and flowline elevation
   4. Type of pipe
   5. B.M. location and elevation (U.S.G.S.datum)

d. Each set of plans shall be accompanied by a separate sheet of details for structures which are to be constructed. All structures shall be designed in accordance with the minimum requirement established by the Midway Sanitation District Standards.

   1. Drawing size: 22"x36" (trim line), one half-size drawing.
   2. Scale of each detail.
   3. Title block, lower right hand corner (same format on all sheets) including the name of the subdivision.
   4. Completely dimensioned and described.

e. Each set of plans shall include the required standard details for the project. All details shall be designed in accordance with the minimum requirement established by the Midway Sanitation District Construction Specifications.

   1. Drawing size: 22"x36" (trim line), one half-size drawings.
   2. Scale of each detail
   3. Title block, lower right hand corner (same format on all sheets) including the name of the subdivision.
   4. Completely dimensioned and described.

E. **RECORD DRAWINGS:** One complete set of "As-built" record drawings shall be submitted to the District. "As-built" record drawings shall be 22" x 34" (Trim line). In addition, the manholes, including inverts, laterals and cleanouts, shall be surveyed after construction is complete. The survey information shall be electronically submitted to the District Engineer. Electronic "As-built" record drawings shall be submitted on CD or equivalent. The electronic file shall be submitted using the latest version of AutoCad, or an equivalent compatible file, and in an ESRI file geodatabase using the database template provided by the District. Ties to the 2" x 4" lateral markers shall be shown. Stationing to all laterals and manholes shall be shown with regard to actual field conditions. Location of "as-built" sewer lines within easements or rights-of-way shall be verified. Easements or rights-of-way shall be amended if necessary. "As-built" record drawings shall be submitted prior to the final inspection being completed. The digital files shall be converted from the project's ground survey coordinates to the State Plane Coordinate System (Utah North, NAD83, U.S. survey foot) by applying the appropriate rotation and elevation scale factors. All elevations shall be reference to an established Midway City or Wasatch County survey marker.

F. **INSPECTION:** All construction work involving the installation of improvements in subdivisions shall be subject to inspection by the District. Certain types of construction shall have continuous inspection while others may have only periodic inspections. Continuous inspection shall be required on the laying of sewer pipe and testing. Periodic inspections shall be required on the excavations for structures and the trenches for laying pipe. On construction requiring continuous inspection, no work shall be done except in the presence of the District Inspector. All inspections shall be provided at the cost of the Developer until the lines are accepted by the District.

G. **REQUESTS FOR INSPECTION:** Requests for inspections shall be made to the District (654-3227) by the person responsible for the construction. Requests for inspection on work requiring continuous inspection shall be made three (3) days prior to the commencing of the work. Notice shall also be given one day in advance of the starting of work requiring periodic inspection, unless specific approval is given otherwise.

H. **CONSTRUCTION COMPLETION INSPECTION:** An inspection shall be made by the District Engineer after all construction work is completed. Any faulty or defective work shall be corrected by the persons responsible for the work within a period of thirty (30) days of the date of District Engineer's Inspection Report defining the faulty or defective work.

I. **GUARANTEE OF WORK:** The Developer shall warrant and guarantee (and post a bond or other security) that the improvements provided for hereunder, and every part thereof, will remain in good condition for a period of one (1) year, after the date of the Construction Completion Inspection report by the District Engineer, and agrees to make all repairs to and maintain the improvements and every part thereof in good condition during the time with no cost to the District. In addition to the tests required for final approval, the Developer shall re-clean and re-televise the sanitary sewer system prior to the one (1) year warranty period and prior to the release of any applicable warranty bonds.

It is further agreed and understood that the determination of necessity of repairs and maintenance of the work rests with the District Engineer. The decision upon the matter shall be final and binding upon the Developer, and the guarantee hereby stipulated shall extend to and include, but shall not be limited to all pipes, joints, manholes, manhole collars, valves, backfill and compaction as well as the working surface and other accessories that are, or may be affected by the construction operations, and whenever, in the judgment of the District Engineer, said work shall be in need of repairs, maintenance, or re-building, If the Developer fails to do so within ten (10) days from the date of the service of such notice, the District Engineer shall have such repairs made, and the cost to such repairs shall be paid by the Developer together with 25 percent in addition thereto as and for stipulated damages for such failure on the part of the Developer to make the repairs.

J. **EASEMENTS:** Permanent easements, for constructing, operating and maintaining the Public wastewater lines, including access within the easement, shall be required for all Public wastewater lines not located in dedicated public roadways. All permanent and access easements shall be a minimum of 20-feet wide. Additional easement width will be required for deep lines as determined by the District Engineer. The wastewater line shall be centered within the permanent easement. Permanent easements shall be submitted on the standard Midway Sanitation District (MSD) grant of easement form. Easements shall extend ten feet beyond dead end manholes. Easements shall be shown on the development plat and on the Districts standard easement form, which grant the easement to the District. Easements must be executed and returned to the District prior to final approval being granted. A final title report for all properties shall be submitted with the Grant of Easement form. A final title report shall demonstrate that the grantor of the easement is the owner of the property where the easement is being granted. The final title report shall demonstrate that there are no encumbrances on the property that would prevent MSD from exercising it rights as contained in the easement. The date of issue of the Final Title report shall be within 60 days of the date the easement is executed and submitted. Permanent structures shall not be located within easements. Trees and other major landscaping features shall not be located within easements.

II. EARTHWORK

A. **SCOPE:** This Section defines the requirements for excavation and backfill for structures.

B. **EXCAVATION FOR STRUCTURES:** All structures shall be founded on undisturbed original subsoil. All unauthorized excavation below the specified structure subgrade shall be replaced with concrete monolithic with that of the slab above or with coarse gravel thoroughly compacted into place.

Subgrade soil for all concrete structures, regardless of type of location, shall be firm, dense, thoroughly compacted and consolidated; shall be free from mud and muck; and shall be sufficiently stable to remain firm and intact under the feet of the workmen engaged in subgrade surfacing, laying reinforcing steel, and depositing concrete. Coarse gravel or crushed stone may be used for subsoil reinforcement if satisfactory results can be obtained thereby. Such material shall be applied in thin layers, each layer being embedded in the subsoil by thorough tamping. All excess soil shall be removed to compensate for the displacement of the gravel or crushed stone and the finished elevation of any subsoil reinforced in this manner shall not be above the specified subgrade.

C. **BACKFILL AROUND STRUCTURES:** Backfill around structures shall be placed to the lines shown on the approved Drawings, or as directed. After completion of the foundation footings and walls and other construction below the elevation to the final grades, and prior to backfilling, all forms shall be removed and the excavation shall be cleaned of all trash and debris. Material for backfilling shall consist of excavated material or borrow of sand, gravel, or other suitable material, and shall be place in layers not exceeding eight (8) inches in un-compacted thickness. Each layer shall be compacted by hand or machine tampers or by other suitable equipment to a density equal to 95% of maximum dries density as measured by AASHTO T-99.

D. **COMPACTING EARTH MATERIALS:** The material shall be deposited in horizontal layers having a thickness of not more than 6 inches after being compacted as hereinafter specified; provided, that when mechanical equipment is used for placing and compacting the material on a sloping foundation, the layers may be placed parallel to the foundations. The distribution of materials shall be such that the compacted material will be homogeneous and free from lenses, pockets, or other imperfections.

Prior to and during compaction operations the material shall have the optimum moisture content required for the purpose of compaction and the moisture content shall be uniform throughout the layers, insofar as practicable. Moistening of the material shall be performed at the site of excavation, but such moistening shall be supplemented, as required by sprinkling at the site of construction. If the moisture content is greater than optimum for compaction, the compaction operations shall be delayed until such time as the material has dried to the optimum moisture content. When the material has been conditioned as hereinbefore specified, the backfill or embankment shall be compacted as follows:

1. Under roadways and extending one foot beyond the proposed curb line the fill or embankment material shall be compacted to a density equal to but not less than 95% of maximum dry density as measured by AASHTO T-99.

2. Under sidewalks and Driveways the fill or embankment material (to at least one foot each side of the edge of the slab) shall be compacted to a density equal to but not less than 95% of maximum dry density as measured by AASHTO T-99.

3. Off-Road Sewer Lines the fill material shall be compacted to a density equal to but not less than 95% of maximum dry density as measured by AASHTO T-99. If the existing material cannot meet compaction requirements, import material will be required.

4. Other Fills and Embankments not listed above shall be compacted to a density equal to but not less than 90% of maximum dry density as measured by AASHTO T-99.

E. **WORK WITHIN PUBLIC RIGHT-OF-WAY:** For those sewer structures being laid in street sections, the Contractor will follow the applicable Standard Specifications, whether they be those of Midway City or of Wasatch County, in the preparation of the road sub-base and the asphalt paving after the excavation for the structure has been properly filled and compacted. Placement of low density concrete or "flowable fill" may be required within existing street crossings as per Midway City, U.D.O.T. or Wasatch County Standard Specifications. Traffic control shall conform to the latest edition of the MUTCD, or U.D.O.T. standards, and shall be approved prior to any work. Roads shall be open to local traffic on all weekends and holidays as much as possible.

III. PORTLAND CEMENT CONCRETE

A. **SCOPE:** This Section of the Specifications defines materials to be used in all Portland cement concrete work and requirements for mixing, placing, finishing and curing.

B. **MATERIALS:** Materials used in Portland cement concrete shall meet the following requirements:

1. Cement: Portland cement shall be Type II and shall comply with the Standard Specification for Portland cement, ASTM C-150.

2. Aggregates: Concrete aggregates shall conform to Tentative Specifications for Concrete Aggregates, ASTM C-33.

3. Water: Water used in mixing concrete shall be clean and free from oil, acid, salt, injurious amounts of alkali, organic matter or other deleterious substances.

4. Entraining Agent: An air-entraining agent shall be used in all concrete exposed to the weather. The agent shall conform to ASTM Designations C-175 and C-260. The target shall be 6%± 1.

5. Admixtures: No admixture will be permitted to be used in Portland cement concrete unless such use is specifically authorized by the District Engineer. No calcium chloride shall be used unless specifically authorized by the District Engineer.

C. **CONCRETE MIX:** For the purpose of practical identification concrete has been divided into four classes: Class A, B, C, & D. Basic requirements and use for each class are as defined below:

Class	Minimum Cement (sacks/c.y.)	Minimum 28-day (psi)	Primary Use
A	7	4000	Reinforced Structural Concrete
B	6.5	3000	Unreinforced footings and foundations.
C	5	2500	Thrust blocks, anchors, mass concrete
D	7.5	4500	Concrete Collars

All concrete shall also comply with the following requirements:

1. Aggregate: The maximum size of the aggregate shall not be larger than one-fifth of the narrowest dimension between forms within which the concrete is to be cast. For unreinforced concrete slabs the maximum size of aggregates shall not be larger than one-fourth the slab thickness. The maximum size aggregate shall be 1 inch.

2. Water: Sufficient water shall be added to the mix to produce concrete with the minimum practicable slump. The slump of mechanically vibrated concrete shall not exceed 4-inches. No concrete shall be placed with a slump in excess of 5-inches.

   The maximum permissible water-cement ratio (including free moisture on aggregates) shall be 5 and 5-3/5 gallons per bag of cement respectively for Class A and B air-entrained concrete.

3. Air Entraining: Air content for air-entrained concrete shall comply with the following: 6% ± 1. The air-entraining agent shall be added as a liquid to the mixing water by means of mechanical equipment capable of accurate measurement and control.

4. Calcium Chloride: Calcium chloride may be added only when approved by the District Engineer.

5. Concrete Collars: Collars around utilities shall have a minimum of 5 pounds per cubic yard of Forta-ferro macro synthetic fibers 2.25" long, or Approved Equal.

D. **FORMS:** Forms shall be substantially built and adequately braced so as to withstand the liquid weight of concrete. All linings, studding, walling and bracing shall be such as to prevent bulging, spreading, or loss of true alignment while pouring and displacement of concrete while setting.

   Forms for the curb, gutter, and sidewalk pavements shall comply to City or County Specifications as applicable.

   Forms for curved sections shall be so constructed and placed that the finish surface of walls will not deviate appreciably from the arc of the curve.

   Exposed vertical and horizontal edges of the concrete in structures shall be chamfered by the placing of moldings in the forms.

E. **PREPARATIONS:** Before batching and placing concrete, all equipment for mixing and transporting the concrete shall be cleaned, all debris and ice shall be removed from the places to be occupied by the concrete, and forms shall be thoroughly wetted (except in freezing weather). Water shall be removed from spaces to receive concrete.

When placing concrete on earth surfaces, the surfaces shall be free from frost, ice, mud and water.

When the subgrade surface is dry soil or pervious material, it shall be sprayed with water immediately before placing of concrete or shall be covered with water-proof sheathing paper or a plastic membrane.

No concrete shall be placed until the surfaces have been inspected and approved by the District Engineer or Inspector.

F. **CONCRETE MIXING**: The concrete shall be mixed until there is a uniform distribution of the materials. Sufficient water shall be used in mixing concrete to produce a mixture which will flatten and quake when deposited in place, but not enough to cause it to flow. Sufficient water shall be used in concrete to produce a mixture which will flow sluggishly when worked on and which, at the same time, can be conveyed from the mixer to the forms without separation of the coarse aggregate from the mortar. In no case shall the quantity of water used be sufficient to cause the collection of a surplus in the forms. The slump shall be 4-inches.

Ready-mixed concrete shall be mixed and delivered in accordance with the requirements set forth in Tentative Specifications for Ready-Mixed (ASTM C-95). Concrete shall be delivered and deposited in its final position within 60-minutes after adding the cement and water to the mixture.

G. **DEPOSITING:** Concrete shall be deposited as nearly as practical in its final position to avoid segregation due to re-handling or flowing. The concrete placing shall be carried on at such a rate that the concrete is at all times plastic and flows readily into the corners of forms. No concrete that has partially hardened or been contaminated by foreign material shall be deposited in the work, nor shall re-tempered concrete be used.

All concrete in structures shall be vibrator compacted during the operation of placing, and shall be thoroughly worked into the corners of the forms.

H. **PLACING CONCRETE IN COLD WEATHER:** No concrete shall be placed where the air temperature is lower than 40° Fahrenheit at a location where the concrete cannot be covered or protected from the surrounding air. When concrete is placed below a temperature of 35 ° Fahrenheit, the ingredients of the concrete shall be heated so that the temperature of the mixture shall not be less than 50° Fahrenheit or more than 100° Fahrenheit. Before mixing, the heated aggregates shall not exceed 125° Fahrenheit and the temperature of the heated water shall not exceed 175° Fahrenheit. Cement shall not be added while the temperature of the mix aggregates and water is greater than 100° Fahrenheit. When there is likelihood of freezing during the curing period, the concrete shall be protected by means of an insulating cover to prevent freezing of the concrete for a period of not less than 7-days after placing.

Equipment for protecting concrete from freezing shall be available at the job site prior to placing concrete. Particular care shall be exercised to protect edges and exposed corners from freezing.

In the event heating is employed, care shall be taken to insure that no part of the concrete becomes dried out or is heated to temperatures above 90° Fahrenheit.

The housing, covering, or other protection used shall remain in place and intact at least 24 hours after the artificial heating is discontinued.

I. **FINISHING:** After the concrete for slabs has been brought to the established grade it shall be worked with a magnesium float and then given a light broom finish. In no case shall dry cement or a mixture of dry cement be sprinkled on the surface to absorb moisture or hasten hardening. Surface edges of all slabs shall be rounded to a radius of ½".

J. **CURING AND PROTECTION:** As soon as the concrete has hardened sufficiently to prevent damage, the finished surface shall be sprinkled with water or covered with sand or earth and in either case, kept wet for at least seven (7) days. When authorized by the District Engineer, a chemical curing agent may be used, provided it is applied in accordance with the manufacturer's specifications.

The freshly-finished surface shall be protected from hot sun and drying winds until it can be sprinkled or covered as above specified. The concrete surface must not be damaged or pitted by rain. The contractor shall provide and use, when necessary, sufficient tarpaulins to completely cover all sections that have been placed within the preceding twelve (12) hours.

The Contractor shall erect and maintain suitable barriers to protect the finished surface. Any section damaged from traffic or other causes occurring prior to its official acceptance shall be repaired or replaced by the contractor at his own expense in a manner satisfactory to the District Engineer.

IV. EXCAVATION AND BACKFILL FOR PIPELINES

A. **SCOPE:** This Section covers the requirements for trenching and backfilling for underground pipelines.

B. **CONTROL OF GROUND WATER:** All trenches shall be kept free from water during excavation, fine grading, pipe laying, jointing, and embedment operations. Where the trench bottom is mucky or otherwise unstable because of the presence of ground water, and in cases where the static ground water elevation is above the bottom of any trench or bell hole excavation, such ground water shall be lowered to the extent necessary to keep the trench free from water and the trench bottom stable when the work within the trench is in progress. Surface water shall be prevented from entering trenches.

C. **EXCAVATION FOR PIPELINES:** Excavation for pipelines shall follow lines parallel to and equidistant from the location of the pipe centerline. Trenches shall be excavated to the depths and widths required to accommodate the construction of the pipelines, as follows:

1. Excavation shall not be carried below the grade shown on the approved Drawings. Any unauthorized excavation made below grade for any reason shall be backfilled in accordance with these specifications.

2. Excavation for trenches in ledge rock, cobble rock, potrock, mud or other material unsatisfactory for pipe foundation shall extend to a depth of at least 6 inches below the bottom of the pipe. A bedding of special material shall be placed and thoroughly compacted with pneumatic tampers in 4-inch lifts to provide a smooth, stable foundation. Special foundation material shall consist of suitable earth materials free from roots, sod or vegetable matter. Trench bottoms shall be hand shaped as specified in Section IV.C.1. above.

   Where unstable earth or muck is encountered in the excavation at the grade of the pipe, a minimum of 12 inches below grade will be removed and backfilled with crushed rock or gravel to provide a stable subgrade.

3. The minimum width of trench, measured at the top of the pipe, shall be at least 6 inches on each side of sewer pipe.

D. **SUBGRADE FOUNDATION FOR PIPE:** Wherever the subgrade material does not afford a sufficiently solid foundation to support the pipe and superimposed load, where water must be drained to maintain a dry bottom for pipe installation, and at other locations as previously defined, the subgrade shall be over excavated to a minimum of 12 inches and replaced with crushed rock or gravel.

Gravel for pipe foundations shall be clean crushed rock or gravel conforming to the following gradation:

Sieve Size (Square Openings)	Percent By Weight Passing Sieve
2 inch	100
1-1/2 inch	95-100
3/4 inch	50-100
3/8 inch	15-55
Number 4	0-25
Number 8	0-5
Number 200	0-2

The gravel material shall be deposited over the entire trench width in 6-inch maximum layers, each layer shall be compacted by tamping, rolling, vibrating, or by a combination of one or more of these methods. In addition the material shall be graded to produce a uniform and continuous support for the installed pipe.

E. **BLASTING:** Blasting will not be allowed except by permission from the District. The Contractor shall comply with all laws, ordinances, and applicable safety code requirements and regulations relative to the handling, storage, and use of explosives and protection of life and property, and shall be fully responsible for all damage attributable to the blasting operations. Excessive blasting or overshooting will not be permitted and any material outside the authorized cross-section which may be shattered or loosened by blasting shall be removed by the Contractor.

F. **SHEETING, BRACING AND SHORING OF EXCAVATIONS:** Excavation shall be sheeted, braced, and shored as required to support the walls of the excavations to eliminate sliding and settling and as may be required to protect the workmen, the work in progress and existing utilities and improvements. All such sheeting, bracing and shoring shall comply with the requirements of the Utah State Industrial Commission and OSHA.

All damage resulting from lack of adequate sheeting, bracing and shoring shall be the responsibility of the Contractor, and the Contractor shall effect all necessary repairs or reconstruction resulting from such damage.

G. **BACKFILLING:** Backfill shall be carefully placed around and over pipes and shall not be permitted to fall directly on a pipe from such a height, or in such a manner as to cause damage. In these Specifications, the process of preparing the trench bottom to receive the pipe and the backfilling on each side of the pipe to a level 12-inches over the top to the pipe is defined as bedding. Bedding requirements are as defined in the Specifications for each specific pipe material.

Trench backfilling above the level of the pipe bedding shall normally be accomplished with native excavated materials and shall be free from rocks larger then 6-inches in diameter.

The backfill in all utility trenches shall be either compacted or consolidated according to the requirements of the materials being placed. Under pavements, or other surface improvements, the in-place density shall be a minimum of 95 % of laboratory standard maximum dry density as determined by AASHO T-99. In areas outside the right-of-way the in-place density shall be a minimum of 90% of the maximum dry density or as determined by District Engineer.

H. **CONSOLIDATION OF BACKFILL:** Consolidation of backfill shall be accomplished by mechanical methods. Authorization by the District Engineer to use any consolidation method does not relieve the Contractor of his responsibility to meet the specific density requirements. Water for consolidation shall be furnished by the Contractor at his expense.

All precautions necessary shall be taken by the Contractor to prevent damage and movement (including floating) of the pipeline, structures and existing adjacent improvements and utilities. The allowance of the use of consolidation methods shall not be construed as guaranteeing or implying that the use of such methods will not result in damage to adjacent grounds. The Contractor shall make his own determination in this regard, and shall assume all risks and liability for settlement or lateral movement of the trench, adjacent ground, or improvement, or utilities, either on the surface of the ground or underground.

I. **COMPACTION OF BACKFILL:** Backfill shall be compacted by means of sheep's foot rollers, pneumatic tire rollers, vibrating rollers, or other mechanical tampers of a size and type approved by the District Engineer.

Where compaction methods are used, the material shall be placed at a moisture content such that after compaction, the required relative densities will be produced; also the material shall be placed in lifts which, prior to the compaction, shall not exceed 6 inches.

Prior to compaction, each layer shall be evenly spread, moistened, and worked by disk harrowing, or other means approved by the District Engineer.

Approval of equipment, thickness of layers, moisture content and compaction effort shall not be deemed to relieve the Contractor of the responsibility for attaining the specified minimum relative densities, and not allowing any trench settlement. The Contractor in planning his work shall allow sufficient time to perform the work connected with test sections, and to permit the District Engineer to make tests for relative densities.

J. **IMPORTED BACKFILL MATERIAL:** In the event the native excavated material is not satisfactory for backfilling, the Contractor shall provide imported granular material. This granular material shall pass a 6-inch sieve and shall not contain more than 15% of material passing a 200-mesh sieve, and shall be free from sod, vegetation and other organic or deleterious materials. The material shall meet the AASHTO soil classification of A-1.

K. **DISPOSAL OF EXCESS MATERIALS:** All excess materials shall be cleaned up and hauled away from the construction site and disposed of in a proper manner by the Contractor.

V. SEWER PIPE

A. **SCOPE**: This section covers the requirements for pipe materials and installation in sanitary sewer construction.

B. **PIPE:** Pipe used in sewer line construction shall be PVC SDR-35 pipe. In special cases, cast iron pipe may be used as explained below.

1. Plastic Sewer Pipe: This specification covers rigid polyvinyl chloride pipe and fittings, hereinafter called PVC pipe and PVC fittings. The pipe and fittings shall meet or exceed all of the requirements of ASTM Specification D-3034.

   This pipe shall be homogeneous throughout and free of cracks, holes, foreign inclusions or other defect. The pipe shall be as uniform as commercially practical in color.

   All PVC sewer pipe shall be made from clean, virgin, type 1, Grade 1, PVC conforming to ASTM resin specification D1784. All pipe joints shall be bell and spigot type with rubber ring gasket to permit expansion and contraction. Pipe and fittings must be assembled with a nontoxic lubricant.

   Spigot ends will have 15° tapered end with a memory mark around the diameter of the pipe to indicated proper insertion depth.

   Wyes shall be of the same material as the pipe and in no case shall have thinner walls than that of the pipe furnished. Sample wyes must be submitted for the District Engineer's approval and his approval must be obtained before purchase of the wyes.

2. Cast Iron Pipe shall be used whenever waterlines cross the top of sewer lines with a separation distance of less than 18 inches, whenever a water main must cross below a sewer line, or whenever a water main must be laid within 10 feet horizontally from any existing or proposed sewer line. The separation distances are measured pipe edge to pipe edge. In the above cases, cast iron pipe with mechanical joints shall extend on each side of the crossing until the perpendicular distance from the sewer line to the water line is at least 10 feet. In making such crossings, it is preferable to center a length of water main so that the joints will be equidistant from the sewer as possible.

C. **SERVICE LATERALS:** As stated in the Midway Sanitation District Declaration of Policies, Rules and Regulations; *Ownership of the lateral from the originating structure to the point of connection to the District's main line, remains with the user and includes the obligation and expense of proper maintenance.*

The diameter of service laterals shall be 4-inch minimum PVC SDR-35 pipe with watertight rubber gasket joints, or cast iron pipe with mechanical joints. Connections to main lines shall be made only to installed wyes or with approved fittings.

When required, for proper stabilization, the subgrade upon which the service lateral is to be laid shall be stabilized by the use of gravel to provide a firm base for the pipe.
All joints shall be tight and waterproof. The size and slope of the service lateral shall be subject to the approval of the District, but in no event shall the diameter be less than four (4) inches.

The slope of such 4-inch pipe shall be not less than one-quarter (1/4) inch per foot (2-percent) unless approved by the District. Pipe shall be laid straight and to uniform grade. Whenever possible, the service lateral shall be brought to the building at an elevation adequate to serve the building drain. In extreme cases, the elevation of the building drain may have to be adjusted. No service lateral shall be laid parallel to or within three (3) feet of any bearing wall which might thereby be weakened.

The depth of the private lateral should be sufficient to provide frost protection from the lateral freezing. The service lateral shall be laid at uniform grade and in straight alignment insofar as possible. Changes in direction shall be made only with properly curved pipe and fittings. A minimum of one clean out shall be placed every 100 feet and at every bend. Clean outs shall be located 5' from the structure to be serviced, including an inspection tee at the property line. Clean out shall have a metal cap. Tracer wire will be required on laterals that can tie to the tracer wire on the main line.

D. **PIPE LAYING:** All sewer pipe installation shall proceed up grade on a stable foundation with joints closely and accurately fitted. Gaskets shall be fitted properly in place and care shall be taken in joining the pipe units to avoid twisting of gaskets. Joints shall be clean and dry and a joint lubricant, as recommended by the pipe supplier, shall be applied uniformly to the mating joint surfaces to facilitate easy positive joint closure.

If adjustment of position of a pipe length is required after being laid, it shall be removed and re-jointed as for a new pipe. When laying is not in progress, the ends of the pipe shall be closed with a tight-fitting stopper to prevent the entrance of foreign material.

All sewer pipe installation shall include locator tape. The locator tape will be marked with SEWER and located 12” above the top of the pipe.

In addition to the above requirements, all pipe installation shall comply to the specific requirements of the pipe manufacturer.

E. **TRACER WIRE INSTALLATION**

A. A copper tracer wire shall be installed the total length of pipeline with a branch to each service lateral. Copper tracer wire should be run to each lateral as shown in the Standard (See Detail).

1. Copper wire should be #14 gauge single strand jacketed wire, manufactured for underground service.

2. Wire shall be continuous without breaks. Splices shall be made with petroleum filled wire nut caps.
3. Tracer Wire to be secured to top of pipe at a minimum of every Ten feet, by means other than metallic.

4. Tracer Wire should be brought up in all manholes, clean outs, and the end of each lateral.

B. A continuity test shall be performed by the contractor in the presence of the designated District representative prior to paving.

F. **SUBGRADE FOUNDATION FOR PIPE:** Wherever the subgrade material does not afford a sufficiently solid foundation to support the pipe and superimposed load, and where groundwater must be drained, the subgrade shall be over excavated to a minimum of 12 inches and replaced with gravel. Gravel foundation material shall be as defined in Section IV of these Construction Specifications.

G. **INSTALLATION REQUIREMENTS FOR LINE AND GRADE:** All sewer pipe shall be installed accurately to the defined line and grade within the following limits:

Variance from established line and grade shall not be greater than one thirty-second (1/32) of an inch per inch of pipe diameter and not to exceed one-half (½) inch, provided that such variation does not result in a level or reverse sloping invert: provided also, that variation in the invert elevation between adjoining ends of pipe, due to non-concentricity of joining surface and pipe interior surfaces, does not exceed one sixty-fourth (1/64) inch per inch of pipe diameter, or one-half (½) inch maximum.

All sewer pipe shall be designed and constructed for mean flow velocities, of not less than 2.0 feet per second as determined by the District Engineer. Pipe slopes shall be calculated using the invert elevations at the center of the manhole and the horizontal distance from the center of manhole to center of manhole.

The following are the minimum slopes (in feet per 100 feet) which shall be provided; however, slopes greater than those listed below are desirable:

SEWER SIZE	MINIMUM SLOPE
8"	0.00500
10"	0.00248
12"	0.00194
18"	0.00113
21"	0.00092
24"	0.00077
30"	0.00057
36"	0.00045

H. **PIPE BEDDING:** All sewer pipes shall be protected from lateral displacement and possible damage resulting from impact or unbalanced loading during backfilling operations by being adequately bedded.
Sewer pipe shall be bedded according to manufacturer's recommendations. A groove shall be excavated in the bottom of the trench to receive the bottom quadrant of the pipe.

Before preparing the groove, the trench bottom shall be excavated or filed and compacted to an elevation sufficiently above the grade of the pipe so that, when completed, the pipe will be true to line and grade. Bell holes shall be excavated so that only the barrel of the pipe receives bearing from the trench bottom.

Pipe bedding materials placed at any point below an elevation 12-inches above the top of the pipe and 6-inches below the bottom of the pipe shall be deposited and compacted in a uniform depth. Deposition and compaction of bedding materials shall be done simultaneously and uniformly on both sides of the pipe. Compaction shall be accomplished with hand or mechanical compactors. All bedding materials shall be placed in the trench in such a manner that they will be scattered alongside the pipe and not dropped into the trench in compact masses.

Bedding materials shall be an AASHTO TYPE A-1-a with 100% passing the 1-1/2 inch sieve. If native material is used, it shall be free from lumps, rocks larger than 1-inch diameter, free from roots, sod, or other organic material, and approved by the District Engineer. In addition the Contractor shall submit to the District Engineer, Two weeks prior to construction, a soil gradation, in accordance with AASHTO T-27, and proctor of the material to be used for bedding. The District reserves the right to require the Contractor to perform compaction and gradation tests as necessary at the expense of the Developer.

In the event trench materials are not satisfactory for pipe bedding, modified bedding will be required. Modified bedding shall consist of placing compacted granular material 6-inches under the pipe, on each side of and to the level of 12-inches above the top of the pipe. Modified bedding materials shall be graded as follows:

Sieve Size (Square Openings)	Percent By Weight Passing Sieve
1-1/2 inch	100
Number 4	30-70
Number 8	20-60
Number 30	10-40
Number 200	0-12

I. **TESTS:** Tests for both displacement and leakage shall be conducted on the installed sanitary system. All inspections and tests shall be provided at the cost of the Developer until the lines are accepted by the District.

1. Displacement Test. The displacement test conducted shall be witnessed and supervised by the District Engineer and shall consist of the following:

   a. The lines and lateral connections will be televised.

   b. The District may elect to be present during the television inspection process.

   c. A flat or reverse grade will not be acceptable.

   d. If the pipeline is found unacceptable, the problem shall be corrected by the contractor and re-televised.

   e. The television inspection process shall be done while water is running in the pipes.

   f. Television inspection must be scheduled at least one (1) week in advance of date inspection is required.

   g. All DVD's shall be turned over to and become the property of the District.

   h. After cleaning and inspection have been completed and any defects are corrected and accepted, the lines shall be tested for leakage by methods discussed in Section V-H-2.

2. Mandrel Test. At the request of the District Engineer, the Contractor shall also perform the mandrel test after cleaning and completion of all other tests. The mandrel test shall be performed after placement and compaction of backfill and before paving or surfacing. The Contractor shall pull the mandrel through the line under test by 1 person, by hand, with reasonable effort, without the aid of mechanical equipment. A successful test shall be achieved where the mandrel is pulled through the total length of the line under test. Utilize a 9 rod mandrel with a minimum length equal to the Nominal Pipe Size and diameter as follows:

Nominal Pipe Size (NPS)	6	8	10	12	15
Mandrel Diameter, inches	5.50	7.37	9.21	10.96	13.56

Nominal Pipe Size (NPS)	18	21	24	27	30
Mandrel Diameter, inches	16.92	19.95	22.45	25.30	28.50

3. Leakage Test. The Contractor shall test all sanitary sewers by means of an exfiltration test. Length of the line tested at one time shall be limited to the length between adjacent manholes.
Each section of the sewer shall be tested between successive manholes by closing the lower end of the sewer to be tested and the inlet sewer of the upper manhole with stoppers. The test shall be either an air test or hydrostatic water test. All test results shall be submitted to the District Engineer.

a. Testing with Water. This test shall only be used with prior approval from the District Engineer. The pipe and manhole shall be filled with water to a point approximately 4-feet above the invert of the sewer at the center of upper manholes.

The allowable leakage will be computed by the formula: E=0.25 D H

Where: E is the allowable leakage in gallons per 1000 feet of sewer tested.
D is the internal diameter of the pipe in inches.
H is the difference in elevation in the water surface in the upper manhole and the invert of the pipe at the lower manhole (feet).

If the leakage from the sewer as shown by the test exceeds that allowed by the formula, the Contractor shall make the necessary corrections to reduce the exfiltration to within permissible limits.

Where the difference in elevation between inverse of adjacent manholes exceeds 10 feet, the exfiltration leakage test will be modified as directed by the District Engineer. House service laterals shall be considered part of the main line sewer to which they are connected and shall be tested with the main line sewer.

b. Testing with Air.

1. Air pressure is the preferred method of testing.

2. The low pressure air test shall be conducted by the following method under the direction of the District Engineer or District Inspector with equipment equal to Cherne Industrial, Inc.

3. All wyes, tees, or ends of lateral stubs shall be suitably capped and braced to withstand the internal test pressures. Caps shall be easily removable for future lateral connections or extensions.

4. After a manhole to manhole section of line has been backfilled and cleaned, it shall be plugged at each manhole with pneumatic plugs. One of the plugs shall have three hose connections. Air for inflation of the triple connection pneumatic plug shall be supplied through a factory-equipped control panel.

5. There shall be three hose connections from the control panel to the pneumatic plug. One hose shall be used for inflation of the plug. The second hose shall be used for continuously reading the air pressure in the sealed line. The third hose shall be used for introducing low pressure air into the sealed line.

6. There shall be a 3-1/2" or larger diameter, 0-30 psig gauge mounted on the control panel for reading of the internal pressure in the line being tested. Calibrations from the 0-10 psig range shall be in tenths of pounds and the 0-10 psig portion shall cover 90% of the complete dial range.

7. Low pressure air shall be introduced into the sealed line until the internal air pressure reaches 5 psig greater than the average back pressure of any ground water that may be over the pipe.

8. At least two (2) minutes shall be allowed for the air pressure to stabilize. After the stabilization period (3.5 psig minimum pressure in the pipe), the third hose shall be disconnected from the control panel.

9. The portion of line being tested shall be accepted if the portion under test does not lose air at a rate greater than 0.003 cubic feet per minute per square foot of internal pipe surface of 2.0 cubic feet per minute minimum when tested at an average 3.0 psig greater than any back pressure exerted by ground water that may be over the pipe at the time of the test.

10. The pipe and joints shall also be considered acceptable when the time required in minutes for pressure to decrease from 3.5 to 2.5 psig (greater than the average back pressure of any ground water that may be over the pipe) shall not be less than the time shown for the given diameters in the following table:

Pipe Diameter (in Inches)	Minutes (min/100 ft)
4	0.3
6	3.0
8	4.0
10	5.0
12	5.5
15	7.5
18	8.5
21	10.0
24	11.5

10. If the installation fails to meet this requirement, the Contractor shall determine at his own expense the source of leakage.

11. The Contractor shall repair or replace all defective materials and/or workmanship.

J. **PRESSURE SEWER MAIN LINES**: Pressure sewer main lines shall only be accepted where approved by the District Board. All sewer lines shall be designed and installed incorporating gravity flow unless approved by the District Board. Pressure sewer lines shall be designed using sound engineering judgment incorporating the current construction specifications and standards including proper pipe thrust blocking, see Standard Drawings. All pressure sewer line designs shall be reviewed and approved by the District Board prior to Preliminary Plan Approval.

K. **OFF-ROAD SEWER LINES:** It is the policy of the District not to allow off-road sewer lines unless the District Board makes the necessary findings of exceptional circumstances as required by the District's Policies and Procedures. If the Board approves installation of off-road sewer lines for a particular project, the District Engineer, under the direction of the Board, has the authority to specify design and construction criteria to govern that project. No work may proceed on off-road sewer lines unless and until the District Engineer has issued specific design and construction criteria and approved the work to proceed in accordance therewith, and has verified that all required easements have been recorded and all necessary agreements between the District and other parties have been executed. During construction, the District Engineer may impose requirements or perform inspections of the work as necessary in the District Engineer's opinion. All Off-Road Sewer manholes shall be made accessible for a ten wheeled vac truck. The preferred access is from a paved trail or other hard surfaces.

VI. MANHOLES

A. **SCOPE:** The Contractor shall furnish and install watertight precast concrete manholes at the locations shown on the Drawings approved by the District Engineer. Manholes shall be furnished complete with cast iron rings, covers and steps.

B. **CONCRETE BASES:** Manhole bases shall be of pre-cast concrete conforming to the requirement of Section III of these Specifications. The invert channels shall be smooth and semi-circular in cross section and have a minimum slope of 0.05 feet per diameter foot. Changes of direction of flow within the manholes shall be made with a smooth curve with as long a radius as possible. The floor of the manholes outside the flow channels shall be smooth and slope toward the channel at not less than 1/4 inch per foot.

C. **WALL AND CONE SECTIONS:** All manholes shall conform to all requirements of ASTM Designation C478 for Reinforced Concrete Culvert Pipe with the following exceptions:

1. The throat section of the manhole shall be adjustable, by use of the pipe sections up to 48 inches in height.

2. The taper section shall be of eccentric conical design, maximum height of 3 feet, and shall taper uniformly from 48 inches (For all pipe up to and including 18" in diameter) or 60 inches (For all larger pipe) to 30 inches inside diameter.

3. The pipe used in the base sections shall be furnished in section lengths of 1, 2, 3 and 4 feet as required.

4. Reinforcing steel shall consist of a circular cage with a minimum cross sectional area of three-tenths (0.3) of a square inch of steel per foot in both directions.

5. The “D-Load” test will not be required.

6. Steps shall be 12" copolymer polypropylene plastic steps on 12" centers with ½“grade 60 steel reinforcement. Steps shall meet ASTM A 615 requirements.

7. Grade rings shall be installed where necessary to raise ring and lid to designed or existing roadway grade. Height of grade rings shall be a minimum of 6" and a maximum of 18". A maximum of three grade rings shall be installed.

8. All joints including grade rings shall be set in mortar consisting of 1 part cement and 1 ½ parts sand with sufficient water added to bring the mixture to workable consistency, or the joints shall be sealed with butyl rubber gasket that is permanently flexible and non-shrinking, similar to Brandt No. 95 Cold Weather Vault Sealant.

D. **IRON CASTINGS:** All iron castings shall conform to the requirements of ASTM A 48 (Class 30) for grey iron castings. Rings and covers shall be equal to Midway Sanitation District Standard with machined bearing surfaces and with minimum cover weight of 150 pounds and minimum ring weight of 233 pounds. In addition to the foundry name and year of manufacture, the cover shall be marked "SEWER." All covers shall be solid unless vented covers are specified by the District Engineer.

Steps shall be provided and installed at an interval of 12" in both the base and cone sections. These steps shall conform to OSHA regulations.

All manhole rings shall be carefully set to the grade shown on the approved drawings or as directed by the District Engineer. A concrete ring, as shown in the Standard Drawings shall be poured around the lid. Concrete shall be in accordance with section III. Concrete shall be at finished grade 1/8" to 1/4" below asphalt surface.

E. **SPACING:** Manholes shall be installed at the end of each line, at all changes in grade, size or alignment of sewer line, at all intersections, and at intervals not to exceed 400 feet.

F. **DROP MANHOLES:** Drop manholes will be used when the sewer entering the manhole is at an elevation of 24 inches or more above the manhole invert. Drop Manholes shall only be allowed with approval from the District Engineer.

G. **OFF-ROAD MANHOLES:** The manhole frame shall be placed directly on the manhole cone. Grade rings and bricks, shall not be used to adjust the final frame elevation on manholes in off-road areas. The joint between the cone and the frame shall be made by placing mastic around the cone, placing the frame, and applying pressure to distribute the mastic material and form a water tight seal.

H. **OFF-ROAD MANHOLES MARKER:** Off-road manholes shall have a 2" diameter by 8' long, Schedule 40, galvanized pipe buried 3' deep. The exposed portion of the marker shall be painted green.

I. **LEAKAGE TESTING:**

1. Vacuum Test

   a. Performed in accordance ASTM C 1244-93.

2. Exfiltration Test

   a. The leakage in the manhole must not be greater than 0.0024 gal/hour/feet of head/inch diameter manhole.

   b. Plug all pipes and fill the manhole with water to bottom manhole ring casting. Refill a hole to original depth after one hour. Measure the water surface drawdown over one hour or some other time agreed upon and calculate the manhole leakage.

c. Stop and/or seal any leaks and retest until a successful test is achieved.

J. **GREASE INTERCEPTOR:** Interceptors shall be provided when, in the judgment of the District Engineer, they are necessary for the proper handling of liquid wastes containing grease or solids which may be harmful to, or cause obstruction of the publicly owned collection work, or interfere with the operation of the treatment works.

All drains from the kitchen, food preparation, meat department, bakery and dish washing areas shall be connected to the grease interceptor. Fixtures to be connected include, but are not limited to, scullery sinks, pot and pan or other sinks, dish washing machines, soup kettles, and floor drains located in areas where grease containing materials exist. Toilets, urinals, and similar fixtures shall not waste through the Grease Interceptor. All waste shall enter the interceptor through the inlet pipe only.

The size and type and location of each interceptor shall be approved by the District Engineer in accordance with these standards. Except where otherwise specifically permitted, no wastes other than that requiring separation shall be discharged into any interceptor. One set of plans, including complete mechanical and plumbing sections shall be submitted to the District for approval prior to construction. Such plans shall include the size, type, sizing calculations, and location of each interceptor. Interceptors shall be so designed and located as to be readily accessible for cleaning and inspection.

Interceptors shall be constructed in accordance with these design specifications and shall have a minimum of two (2) compartments with fittings designed for grease retention. There shall be a minimum of two (2) manholes to provide access for cleaning and inspection of all fixtures and compartments of the interceptor. Interceptor design and construction shall conform to the Standard Drawing.

The size of the interceptor shall be sized in accordance with the sizing criteria as set forth in the Uniform Plumbing Code Chapter 7, equation is outlined on the Grease Interceptor Standard Drawings. The minimum retention time shall be 15 minutes.

VII. DUCTILE IRON PIPE AND FITTINGS

A. **SCOPE:** This Section covers requirements for the furnishing and installation of ductile iron pipe and fittings.

B. **DUCTILE IRON PIPE:** Ductile iron pipe shall be designed in accordance with the latest revision of ANSI/AWWA C150/A21.50. Ductile iron pipe shall be manufactured in the U.S.A. in accordance with the latest revision of ANSI/AWWA C151/A21.51. All pipe shall be furnished with push-on type joints. Joints shall be in accordance with of the latest revision of ANSI/AWWA C111/A21.11 and be furnished complete with all necessary accessories.

C. **DUCTILE IRON FITTINGS:** Ductile iron fittings shall conform to the latest revisions of either ANSI/AWWA C110/A21.10 or ANSI/AWWA C153/A21.53. Fittings shall be ductile iron and manufactured in the U.S.A. Fittings shall have a standard asphaltic coating on the exterior. Fittings shall also have a cement-mortar lining on the interior in accordance with the latest revisions of ANSI/AWWA C104/A21.40.

D. **COATINGS AND LININGS FOR DUCTILE IRON PIPE AND FITTINGS:** All exterior surfaces of pipe and fittings shall be coated with a standard asphaltic coating. Pipe shall also have an interior cement-mortar lining in accordance with ANSI/AWWA C104/A21.40.

E. **HANDLING DUCTILE IRON PIPE AND FITTINGS:** Pipe and fittings shall be handled in such a manner as to insure installation in sound, undamaged condition. Particular care shall be taken not to injure the pipe coating and lining. Cement lining in pipe or fittings which is broken or loosened shall be cause for rejection of the pipe and/or fittings.
All damaged pipe coating shall be repaired prior to laying the pipe or placing the backfill. Repair shall be accomplished by removing all damaged coating, wire-brushing to exposed the mental, and applying two coats of coal for coating of a type and quality equal to that used originally in coating the pipe.

F. **CUTTING, CLEANING AND INSPECTION:** Cutting of pipe for closure pieces or for other reasons shall be done in a neat and workmanlike manner by a method which will not damage the pipe. Before installation, each pipe shall be inspected for defects and run with a light hammer to detect cracks. All defective, damaged or unsound pipe shall be rejected.

G. **PIPE INSTALLATION:** The bottom of the trench shall be cut flat, true and even to provide uniform bearing for the full length of the pipe barrel. Each pipe shall be laid true to line and grade and in such manner as to form a close concentric joint with adjoing pipe to prevent sudden offsets. Pipe bedding and trench backfill shall be as defined in the previous sections covering bedding and backfill for sewer lines. As work progresses, the interior of the pipe shall be cleared of dirt and other superfluous materials. Trenches shall be kept free from water until pipe jointing has been completed and pipe shall not be laid when conditions of trench or weather is unsuitable for such work.

At all times when work is not in progress, all open ends of pipe and fittings shall be securely closed so that no water, earth, or other substance will enter the pipe or fittings. The joining of mechanical joint and push on rubber gasket joint pipe shall be in accordance with recommendations of the pipe manufacturer.

STANDARD DRAWINGS

TABLE OF CONTENTS

Sewer -1	Typical Sewer Service Connection
Sewer -2	Lateral Connections
Sewer -3	Service Lateral Connection/Reconnection
Sewer -4	Pre-Cast Concrete Sewer Manhole
Sewer -5	Cast-In-Place Concrete Sewer Manhole
Sewer -6	Concrete Collar Detail
Sewer -7	Tracer Wire Installation
Sewer -8	Temporary Sewer Main Cleanout
Sewer -9	Heavy Duty, HS-20 Loading Minimum, Manhole Ring and Cover
Sewer -10	Utility Installation in Existing Roadways
Sewer -11	Utility Installation Outside of Roadway
Sewer -12	Grease Interceptor – 1
Sewer -13	Grease Interceptor – 2
Sewer -14	Sampling Manhole
Sewer -15	Off-Road Sewer Line Trench

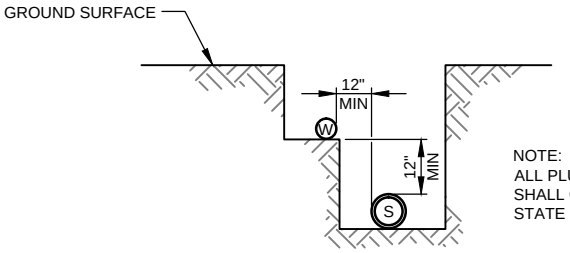

NOTE:
ALL PLUMBING PRACTICES SHALL CONFORM TO THE UTAH STATE PLUMBING CODE.

SEWER AND WATER LATERAL IN COMMON TRENCH

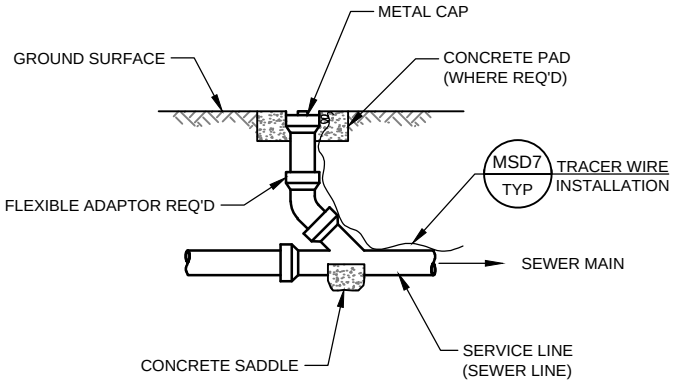

CLEAN OUT DETAIL

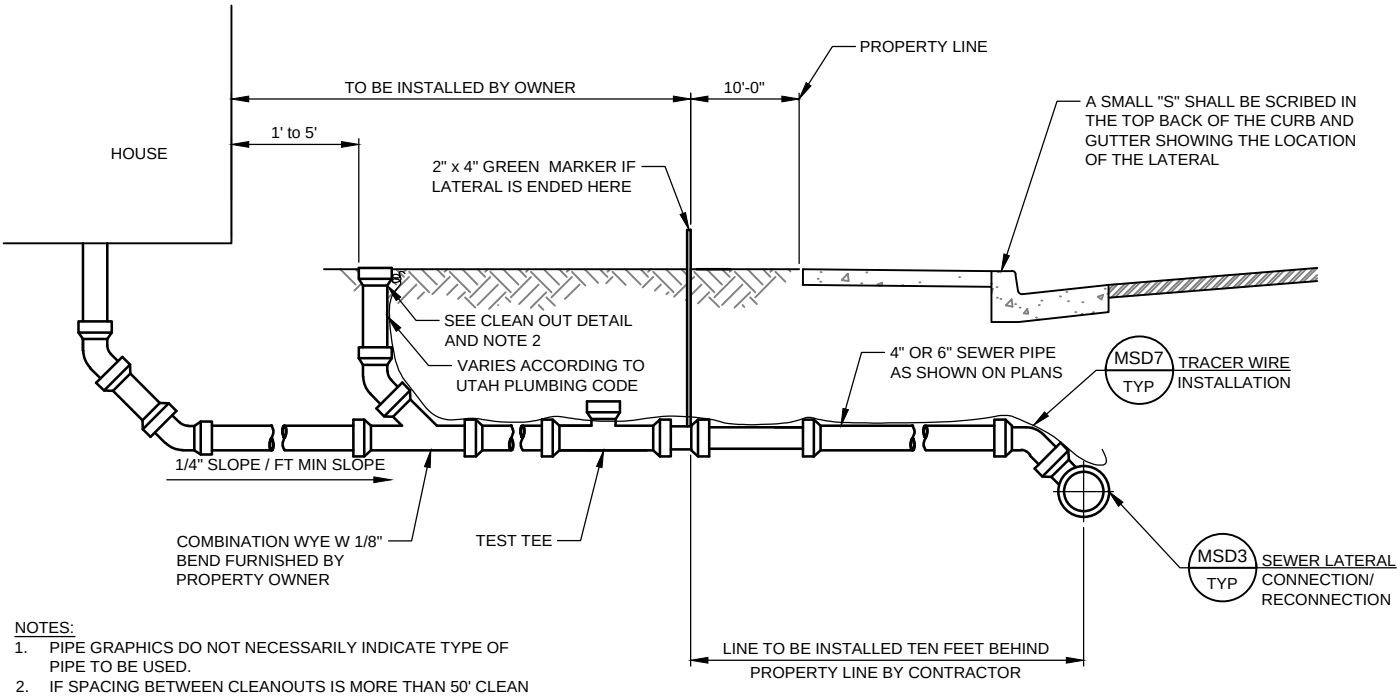

NOTES:
1. PIPE GRAPHICS DO NOT NECESSARILY INDICATE TYPE OF PIPE TO BE USED.
2. IF SPACING BETWEEN CLEANOUTS IS MORE THAN 50' CLEAN OUT AT PROPERTY LINE WILL BE REQUIRED.
3. MAINTAIN SPACING BETWEEN CLEAN OUTS 50'.
4. ALL BENDS SHALL BE 45° OR LESS. 90° BENDS ARE NOT ALLOWED.

MSD1 TYP TYPICAL SEWER SERVICE CONNECTION
N.T.S.

HORROCKS ENGINEERS

DATE:
MARCH 2014

2162 West Grove Parkway
Suite 400
Pleasant Grove, UT 84062
(801) 763-5100

MIDWAY SANITATION DISTRICT
STANDARD DRAWING

SEWER - 1

H:\Midway S. Dist\District Projects\Construction Specifications\2014\STANDARD DRAWINGS\SEWER 1.dwg - Layout1 - 3/31/2014 10:00am, NATALIER

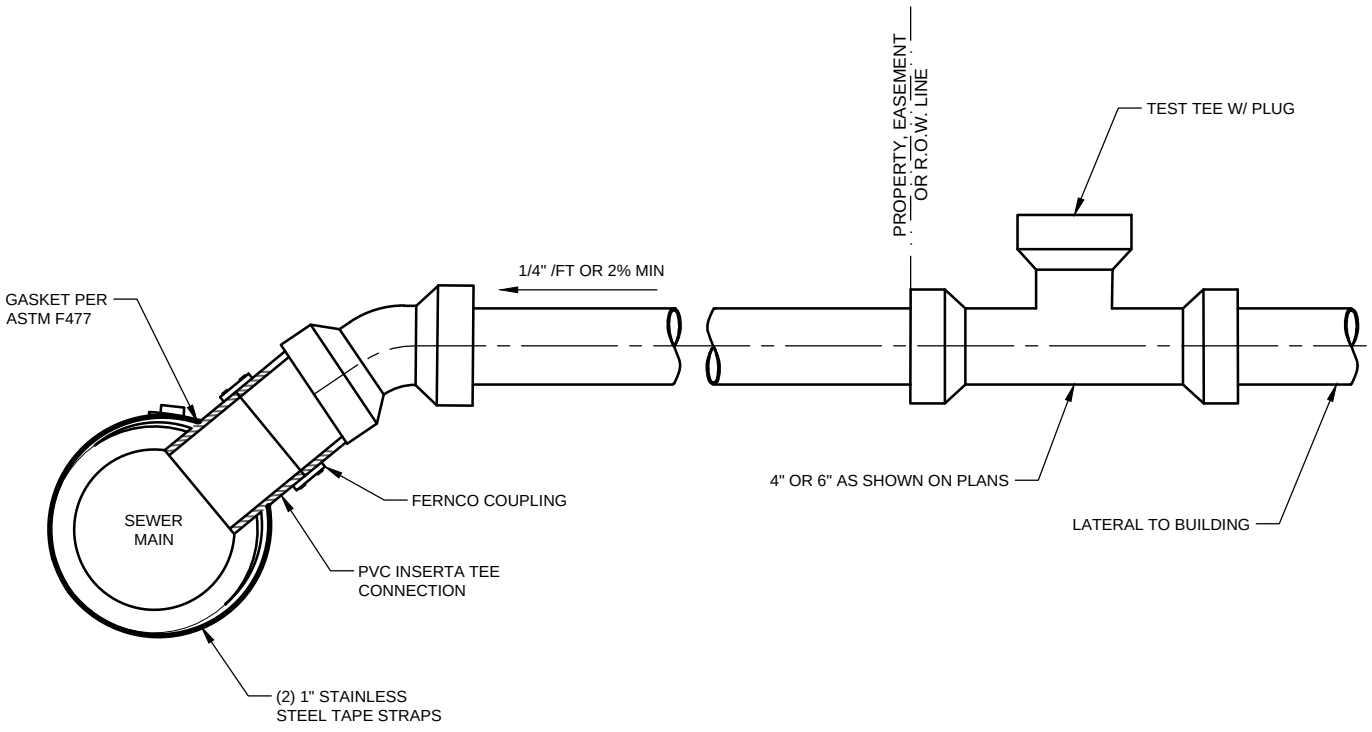

LATERAL CONNECTION TO EXISTING SEWER LINE

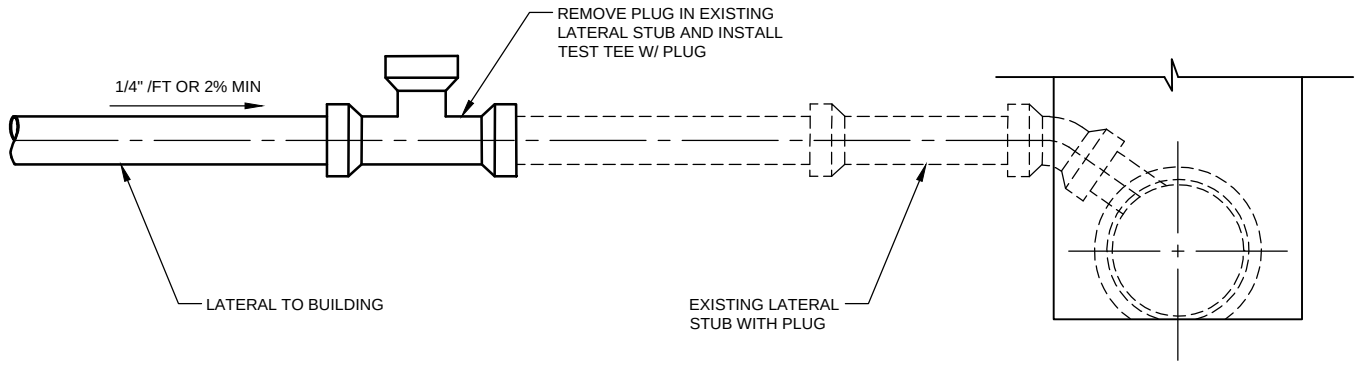

LATERAL CONNECTION TO EXISTING LATERAL STUB

MSD2 / TYP — LATERAL CONNECTIONS

N.T.S.

HORROCKS ENGINEERS

DATE: MARCH 2014

2162 West Grove Parkway
Suite 400
Pleasant Grove, UT 84062
(801) 763-5100

MIDWAY SANITATION DISTRICT
STANDARD DRAWING

SEWER - 2

H:\Midway S. Dist\District Projects\Construction Specifications\2014\STANDARD DRAWINGS\SEWER 2.dwg - Layout1 - 3/31/2014 09:15am, NATALIER

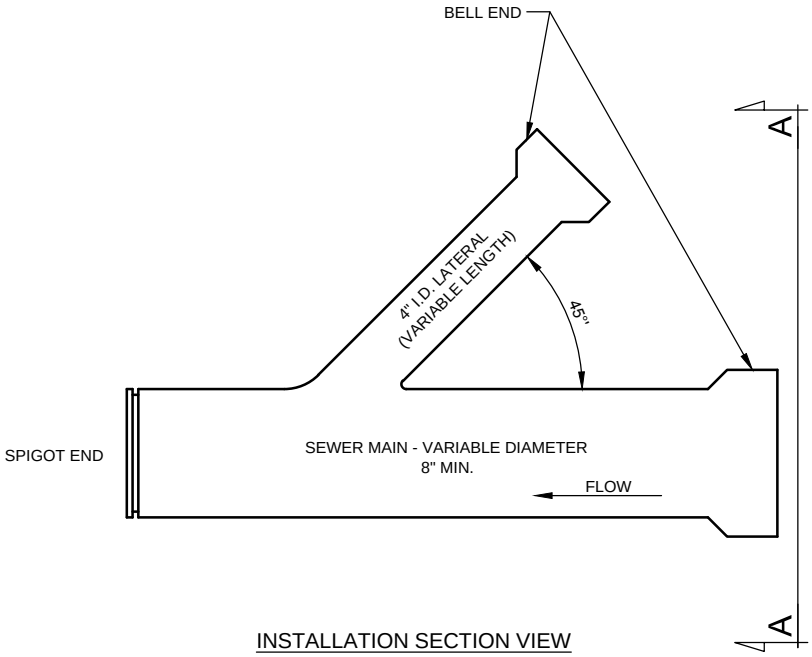

INSTALLATION SECTION VIEW

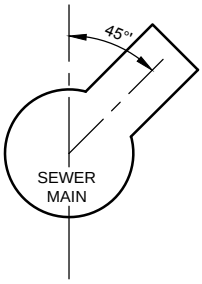

SECTION A-A

MSD3 / TYP — SEWER LATERAL CONNECTION/ RECONNECTION

N.T.S.

HORROCKS ENGINEERS

DATE: MARCH 2014

2162 West Grove Parkway
Suite 400
Pleasant Grove, UT 84062
(801) 763-5100

MIDWAY SANITATION DISTRICT
STANDARD DRAWING

SEWER - 3

H:\Midway S. Dist\District Projects\Construction Specifications\2014\STANDARD DRAWINGS\SEWER 3.dwg - Layout1 - 3/31/2014 09:15am, NATALIER

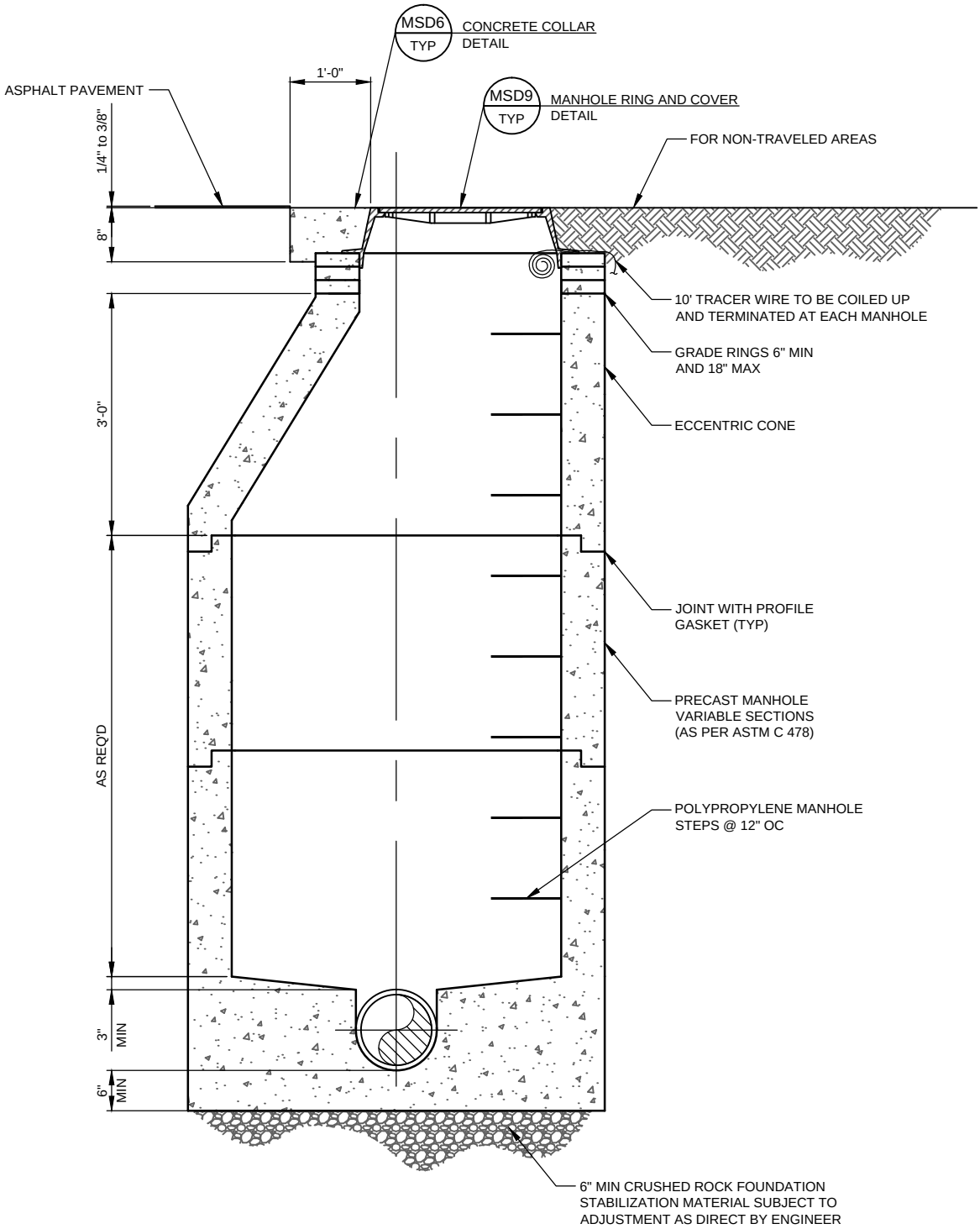

NOTES:

1. LOCATED MANHOLE COVER ON DOWNSTREAM SIDE OF MANHOLE. SET MANHOLE FRAME IN GROUT.
2. ALL JOINTS TO BE WATER TIGHT.
3. MANHOLE BASE AND 1st SECTION OF MANHOLE TO BE FABRICATED AS AN INTEGRAL UNIT.
4. USE 5' DIAMETER MANHOLE FOR 18" PIPE AND LARGER. USE 4' DIAMETER MANHOLE FOR ALL PIPE UP TO 18" DIAMETER PIPE.

MSD4 TYP — PRECAST CONCRETE SEWER MANHOLE

N.T.S.

HORROCKS ENGINEERS

DATE: MARCH 2014

2162 West Grove Parkway
Suite 400
Pleasant Grove, UT 84062
(801) 763-5100

MIDWAY SANITATION DISTRICT
STANDARD DRAWING

SEWER - 4

H:\Midway S. Dist\District Projects\Construction Specifications\2014\STANDARD DRAWINGS\SEWER 4.dwg - Layout1 - 3/31/2014 10:21am, NATALIER

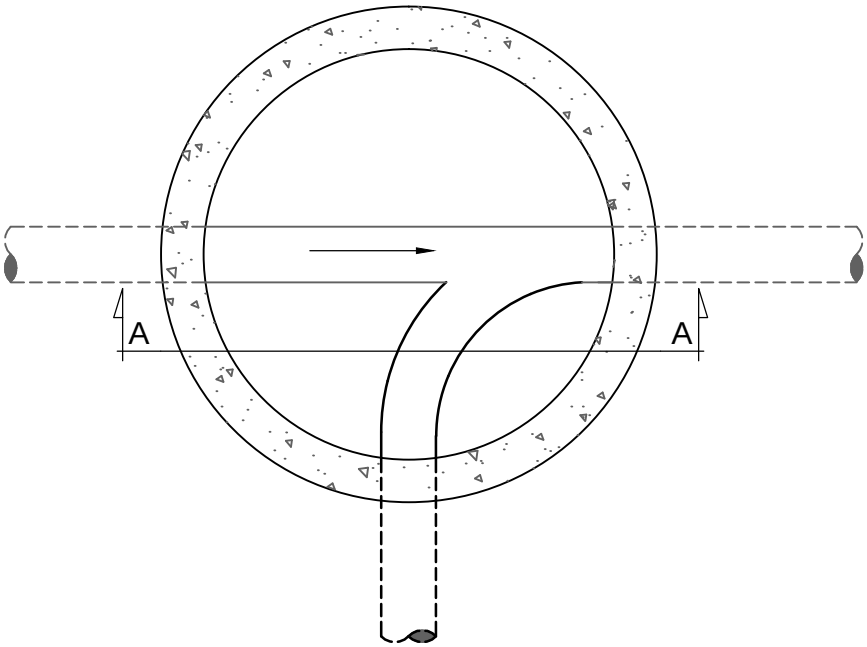

PLAN

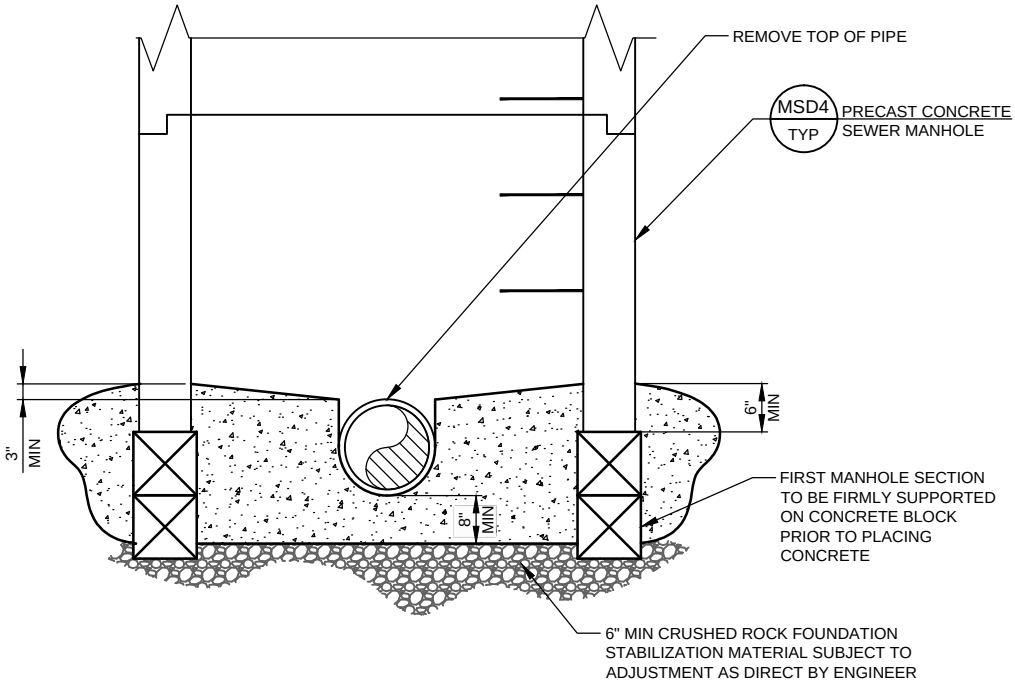

SECTION A-A

NOTES:

1. LOCATED MANHOLE COVER ON DOWNSTREAM SIDE OF MANHOLE. SET MANHOLE FRAME IN GROUT.
2. ALL JOINTS TO BE WATER TIGHT.
3. USE 5' DIAMETER MANHOLE FOR 18" PIPE AND LARGER. USE 4' DIAMETER MANHOLE FOR ALL PIPE UP TO 18" DIAMETER PIPE.
4. WAIT 24 HOURS PRIOR TO PLACING SECTIONS ON THE BASE SECTION.
5. CONCRETE BLOCK TO BE APPROVED BY ENGINEER PRIOR TO USE.

MSD5 TYP — CAST-IN-PLACE CONCRETE SEWER MANHOLE

N.T.S.

HORROCKS ENGINEERS

DATE: MARCH 2014

2162 West Grove Parkway
Suite 400
Pleasant Grove, UT 84062
(801) 763-5100

MIDWAY SANITATION DISTRICT
STANDARD DRAWING

SEWER - 5

H:\Midway S. Dist\District Projects\Construction Specifications\2014\STANDARD DRAWINGS\SEWER 5.dwg - Layout1 - 3/31/2014 09:18am, NATALIER

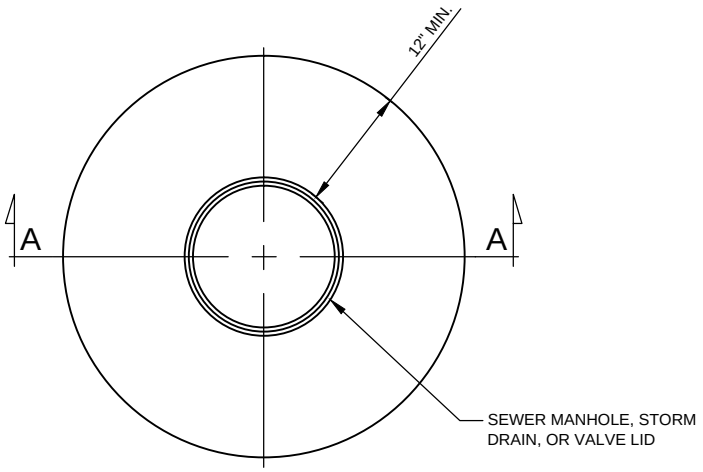

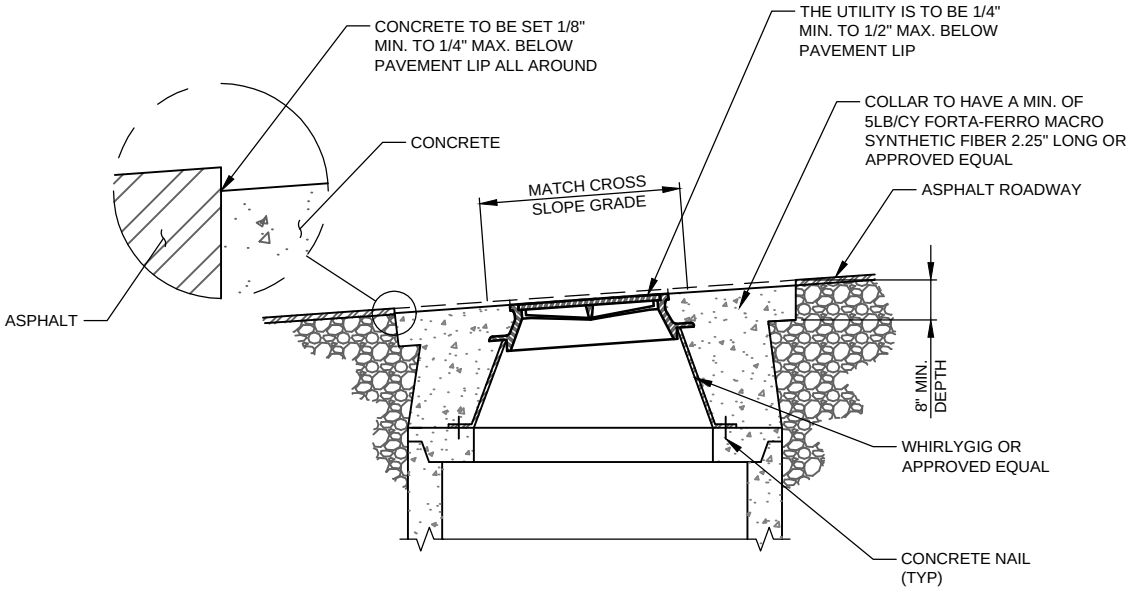

SECTION A-A

NOTES:
1. CONCRETE COLLAR, CLASS 4000 SEE SECTION 03304.
2. COLLAR PERIMETER SHALL BE CUT USING A SAW UNLESS APPROVED BY THE ENGINEER.

MSD6 / TYP — CONCRETE COLLAR DETAIL
N.T.S.

HORROCKS ENGINEERS

DATE: MARCH 2014

2162 West Grove Parkway
Suite 400
Pleasant Grove, UT 84062
(801) 763-5100

MIDWAY SANITATION DISTRICT
STANDARD DRAWING

SEWER - 6

H:\Midway S. Dist\District Projects\Construction Specifications\2014\STANDARD DRAWINGS\SEWER 6.dwg - Layout1 - 3/28/2014 10:31am, NATALIER

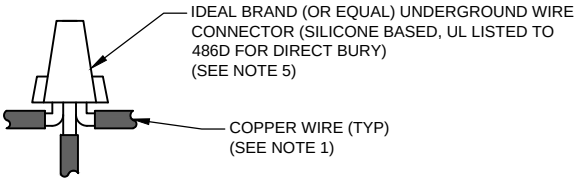

SPLICE DETAIL

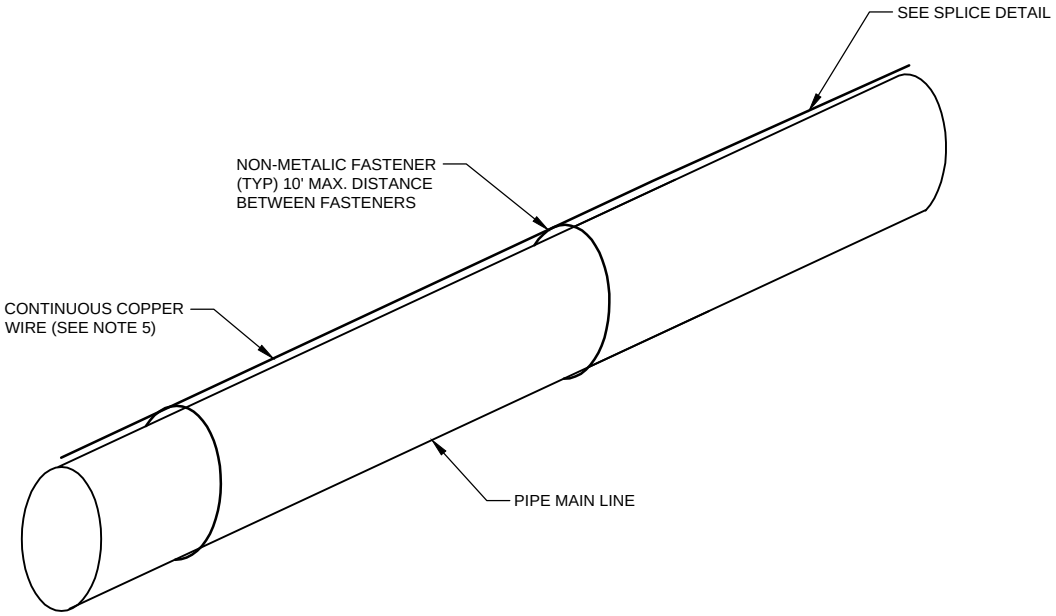

NOTES:

1. COPPER WIRE SHALL BE #14 AWG SOLID UF TYPE WITH CROSS-LINKED POLYETHYLENE INSULATION.
2. COPPER TRACER WIRE TO BE INSTALLED THE LENGTH OF PIPELINE. TRACER WIRE IS TO BE INSTALLED ALSO TO EACH LATERAL.
3. TRACER WIRE TO BE INSTALLED ALONG EACH WATER SERVICE TO THE METER CAN.
4. TRACER WIRE TO BE INSTALLED AND MAINTAINED ON TOP OF PIPE CENTERLINE DURING BACKFILL.
5. TWO, THREE AND FOUR WIRE CONNECTIONS: STRIP WIRE ENDS, INSTALL IDEAL UNDERGROUND WIRE NUTS, AND WRAP WITH THREE LAYERS OF SCOTCH 33 OR EQUAL, ELECTRICAL TAPE. OVERLAP THE TAPE WRAPPING, 6" ONTO THE WIRE INSULATION.
6. CONTRACTOR SHALL TEST TRACER WIRE FOR CONTINUITY PRIOR TO PAVING IN THE PRESENCE OF THE ENGINEER.

MSD7 / TYP — TRACER WIRE INSTALLATION

N.T.S.

HORROCKS ENGINEERS

DATE: MARCH 2014

2162 West Grove Parkway
Suite 400
Pleasant Grove, UT 84062
(801) 763-5100

MIDWAY SANITATION DISTRICT
STANDARD DRAWING

SEWER - 7

H:\Midway S. Dist\District Projects\Construction Specifications\2014\STANDARD DRAWINGS\SEWER 7.dwg - Layout1 - 3/31/2014 10:03am, NATALIER

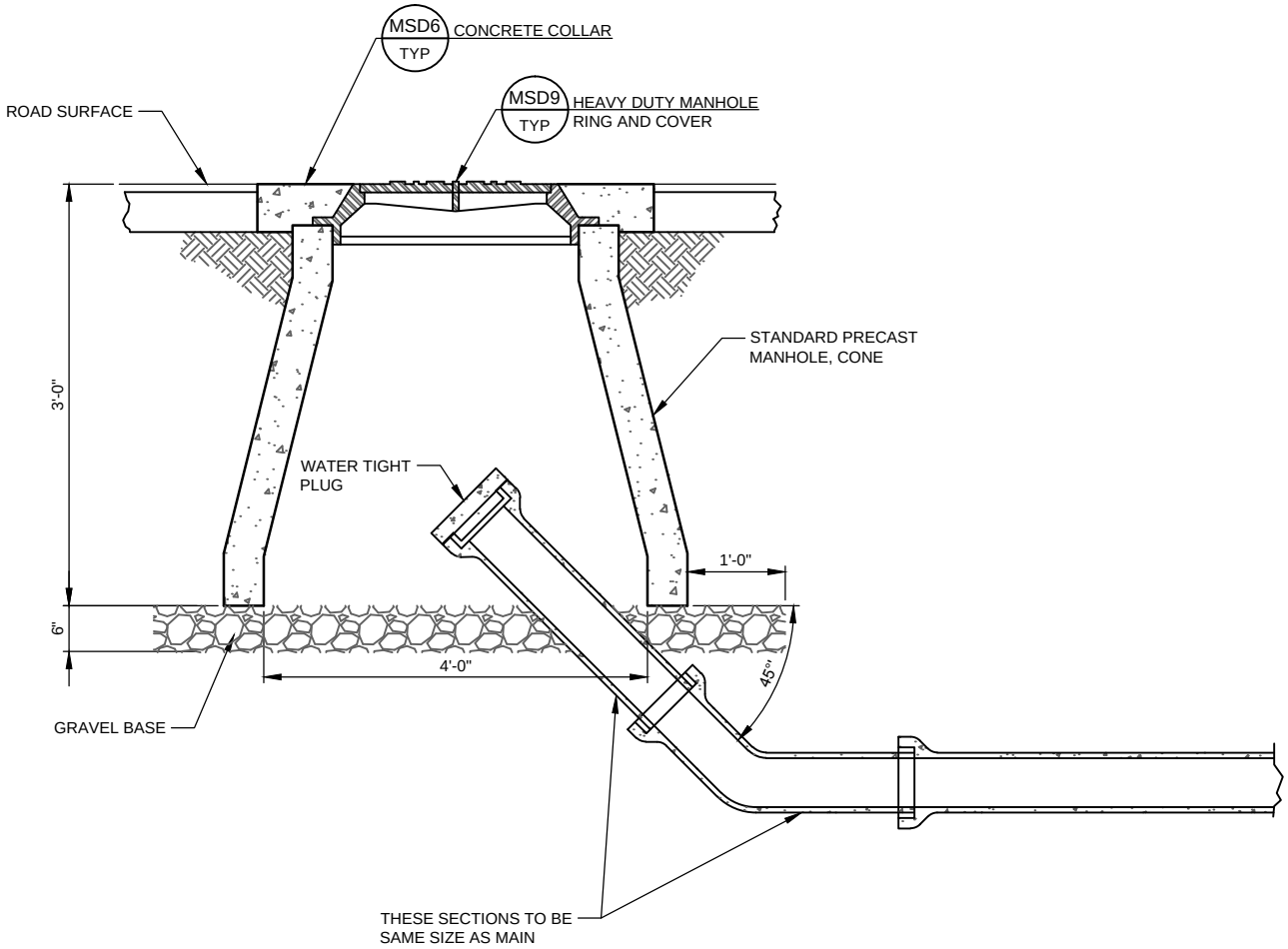

MSD8 TYP **TEMPORARY SEWER MAIN CLEANOUT**

N.T.S.

HORROCKS ENGINEERS

DATE: MARCH 2014

2162 West Grove Parkway
Suite 400
Pleasant Grove, UT 84062
(801) 763-5100

MIDWAY SANITATION DISTRICT STANDARD DRAWING

SEWER - 8

H:\Midway S. Dist\District Projects\Construction Specifications\2014\STANDARD DRAWINGS\SEWER 8.dwg - Layout1 - 3/31/2014 10:04am, NATALIER

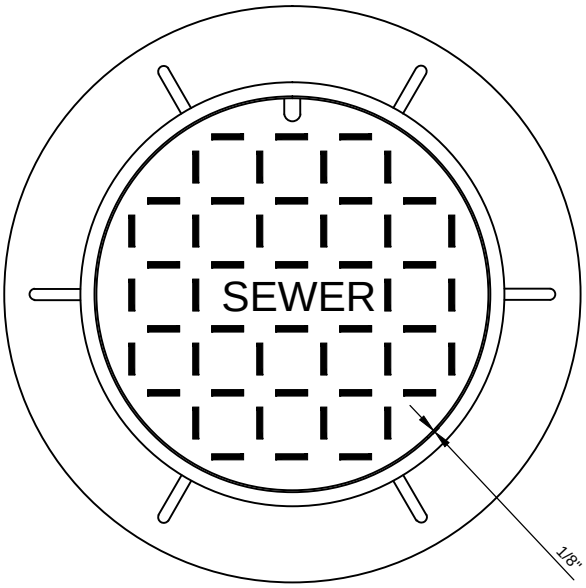

PLAN OF COVER AND RING

D&L SUPPLY A-1181 (SOLID)
D&L SUPPLY A-1180 (VENTED)
OR APPROVED EQUAL

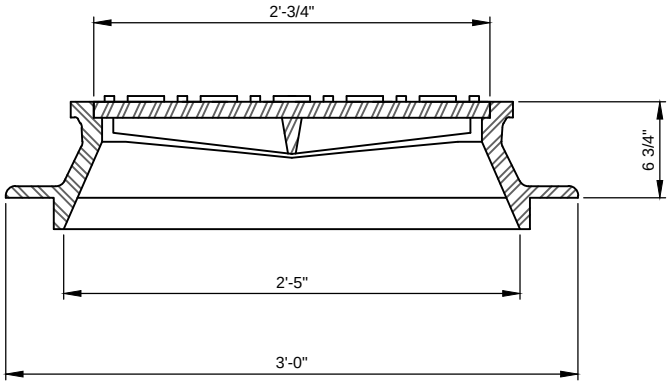

NOTE:
1. MANHOLE COVERS SHALL BE SOLID UNLESS DISTRICT ENGINEER SPECIFIES VENTED COVERS.
2. HEAVY DUTY, HS-20 LOADING MINIMUM.

MSD9 / TYP

HEAVY DUTY, HS-20 LOADING MINIMUM, MANHOLE RING AND COVER

N.T.S.

HORROCKS ENGINEERS

DATE: MARCH 2014

2162 West Grove Parkway
Suite 400
Pleasant Grove, UT 84062
(801) 763-5100

MIDWAY SANITATION DISTRICT
STANDARD DRAWING

SEWER - 9

H:\Midway S. Dist\District Projects\Construction Specifications\2014\STANDARD DRAWINGS\SEWER 9.dwg - Layout1 - 3/28/2014 10:38am, NATALIER

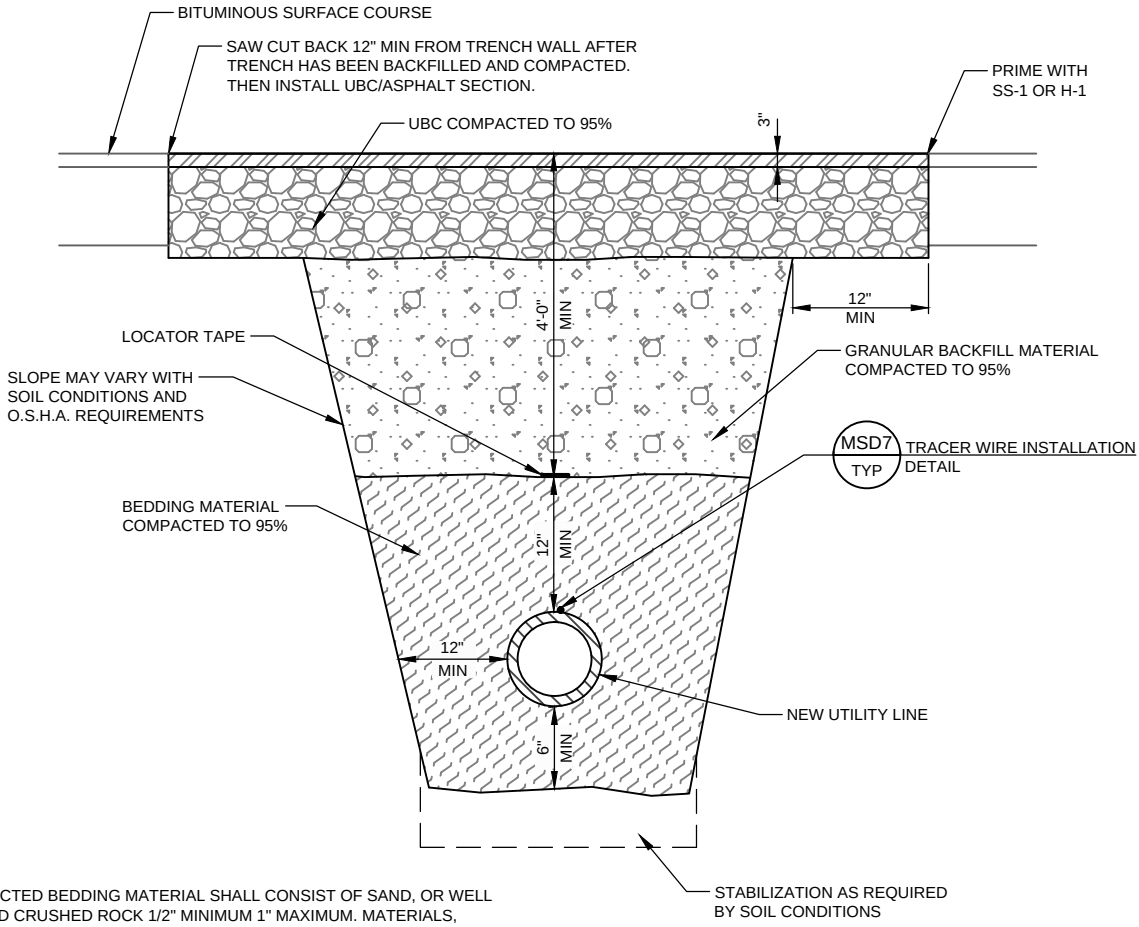

NOTES:

1. COMPACTED BEDDING MATERIAL SHALL CONSIST OF SAND, OR WELL GRADED CRUSHED ROCK 1/2" MINIMUM 1" MAXIMUM. MATERIALS, METHOD AND COMPACTION, SHALL BE APPROVED BY ENGINEER.
2. USE PROPER MARKER TAPE APPROVED BY ENGINEER.

MSD10 TYP UTILITY INSTALLATION IN EXISTING ROADWAYS

N.T.S.

HORROCKS ENGINEERS

DATE: MARCH 2014

2162 West Grove Parkway
Suite 400
Pleasant Grove, UT 84062
(801) 763-5100

MIDWAY SANITATION DISTRICT
STANDARD DRAWING

SEWER - 10

H:\Midway S. Dist\District Projects\Construction Specifications\2014\STANDARD DRAWINGS\SEWER 10.dwg - Layout1 - 3/31/2014 10:07am, NATALIER

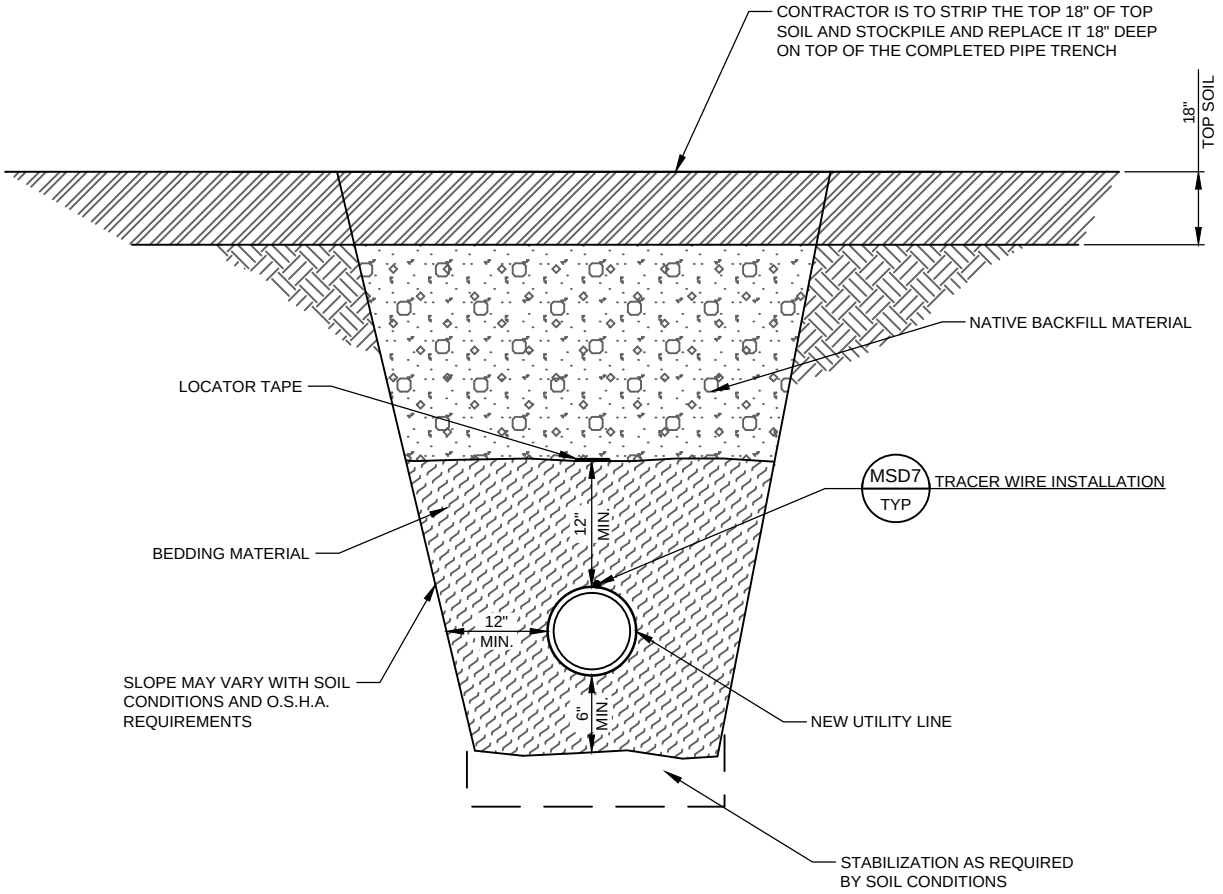

NOTES:

1. COMPACTED BEDDING MATERIAL SHALL CONSIST OF SAND, OR WELL GRADED CRUSHED ROCK 1/2" MINIMUM 1" MAXIMUM. MATERIALS, METHOD & COMPACTION, SHALL BE APPROVED BY ENGINEER.
2. CONTRACTOR SHALL RE-SEED DISTURBED PROPERTY WITH AGRICULTURAL SEED MIXTURE APPROVED BY PROPERTY OWNER.
3. USE PROPER MARKER TAPE APPROVED BY ENGINEER.

MSD11 TYP UTILITY INSTALLATION OUTSIDE OF ROADWAY

N.T.S

HORROCKS ENGINEERS

DATE: MARCH 2014

2162 West Grove Parkway
Suite 400
Pleasant Grove, UT 84062
(801) 763-5100

MIDWAY SANITATION DISTRICT
STANDARD DRAWING

SEWER - 11

H:\Midway S. Dist\District Projects\Construction Specifications\2014\STANDARD DRAWINGS\SEWER 11.dwg - Layout1 - 3/31/2014 10:09am, NATALIER

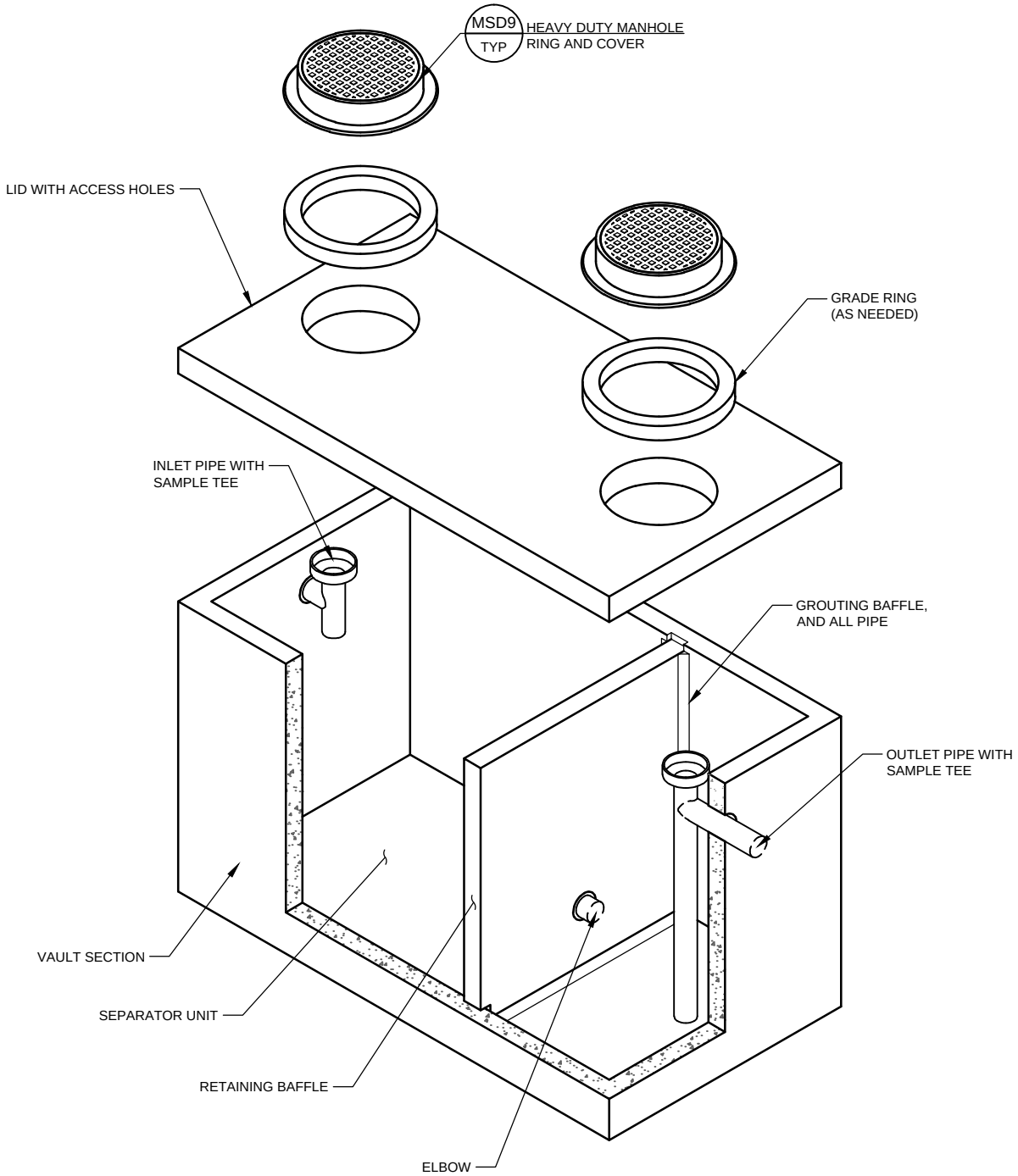

NOTES:

1. VAULT DESIGN COMPILES WITH ASTM C-857 AND C-858 WITH LESS THAN 2' OF EARTH COVER AND AN AASHTO HS-20 LOADING.
2. CONTRACTOR TO GROUT BAFFLES IN PLACE.
3. CONTRACTOR TO FILL ALL LIFT INSERT RECESSES WITH GROUT PRIOR TO BACKFILL.
4. CONTRACTOR MUST FILL THE SEPARATOR UNIT WITH CLEAN WATER BEFORE IT IS PUT INTO SERVICE.

MSD12 GREASE INTERCEPTOR - 1
TYP
N.T.S.

HORROCKS ENGINEERS

DATE:
MARCH 2014

2162 West Grove Parkway
Suite 400
Pleasant Grove, UT 84062
(801) 763-5100

MIDWAY SANITATION DISTRICT
STANDARD DRAWING

SEWER - 12

H:\Midway S. Dist\District Projects\Construction Specifications\2014\STANDARD DRAWINGS\SEWER 12.dwg - Layout1 - 3/31/2014 10:10am, NATALIER

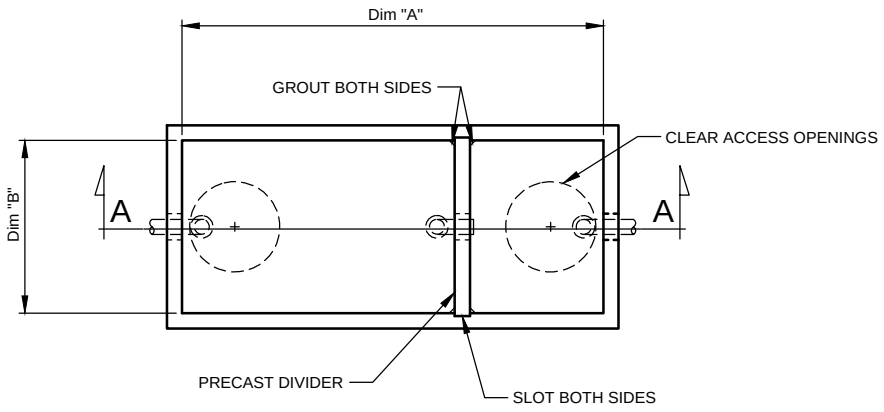

PLAN VIEW

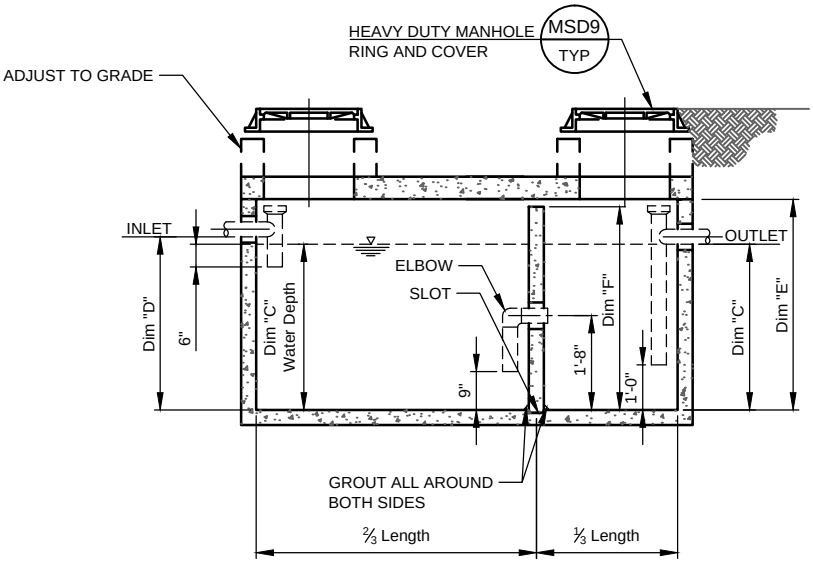

SECTION VIEW AA

Gallon Capacity		430	890	1375	1800	2175	2550	5000
	Dim "A"	6'-0"	8'-0"	12'-0"	10'-0"	12'-0"	14'-0"	14'-0"
	Dim "B"	4'-0"	6'-0"	6'-0"	8'-0"	8'-0"	8'-0"	8'-0"
Water Depth	Dim "C"	2'-8"	2'-8"	2'-8"	3'-2"	3'-2"	3'-2"	7'-2"
	Dim "D"	2'-10"	2'-10"	2'-10"	3'-4"	3'-4"	3'-4"	7'-4"
	Dim "E"	3'-6"	3'-6"	3'-6"	4'-0"	4'-0"	4'-0"	8'-0"
	Dim "F"	3'-4"	3'-4"	3'-4"	3'-10"	3'-10"	3'-10"	7'-10"
	Weight	12,760	20,510	27,740	31,485	35,980	40,475	43,840

DESIGN CRITERIA

Uniform Plumbing Code - Appendix H

Number of Meals Per Peak Hours x Waste Flow Rate x Retention Time x Storage Factor = Capacity in Gallons

MSD13 GREASE RECEPTOR - 2
TYP
N.T.S.

HORROCKS ENGINEERS

DATE: MARCH 2014

2162 West Grove Parkway
Suite 400
Pleasant Grove, UT 84062
(801) 763-5100

MIDWAY SANITATION DISTRICT
STANDARD DRAWING

SEWER - 13

H:\Midway S. Dist\District Projects\Construction Specifications\2014\STANDARD DRAWINGS\SEWER 13.dwg - Layout1 - 3/31/2014 10:12am, NATALIER

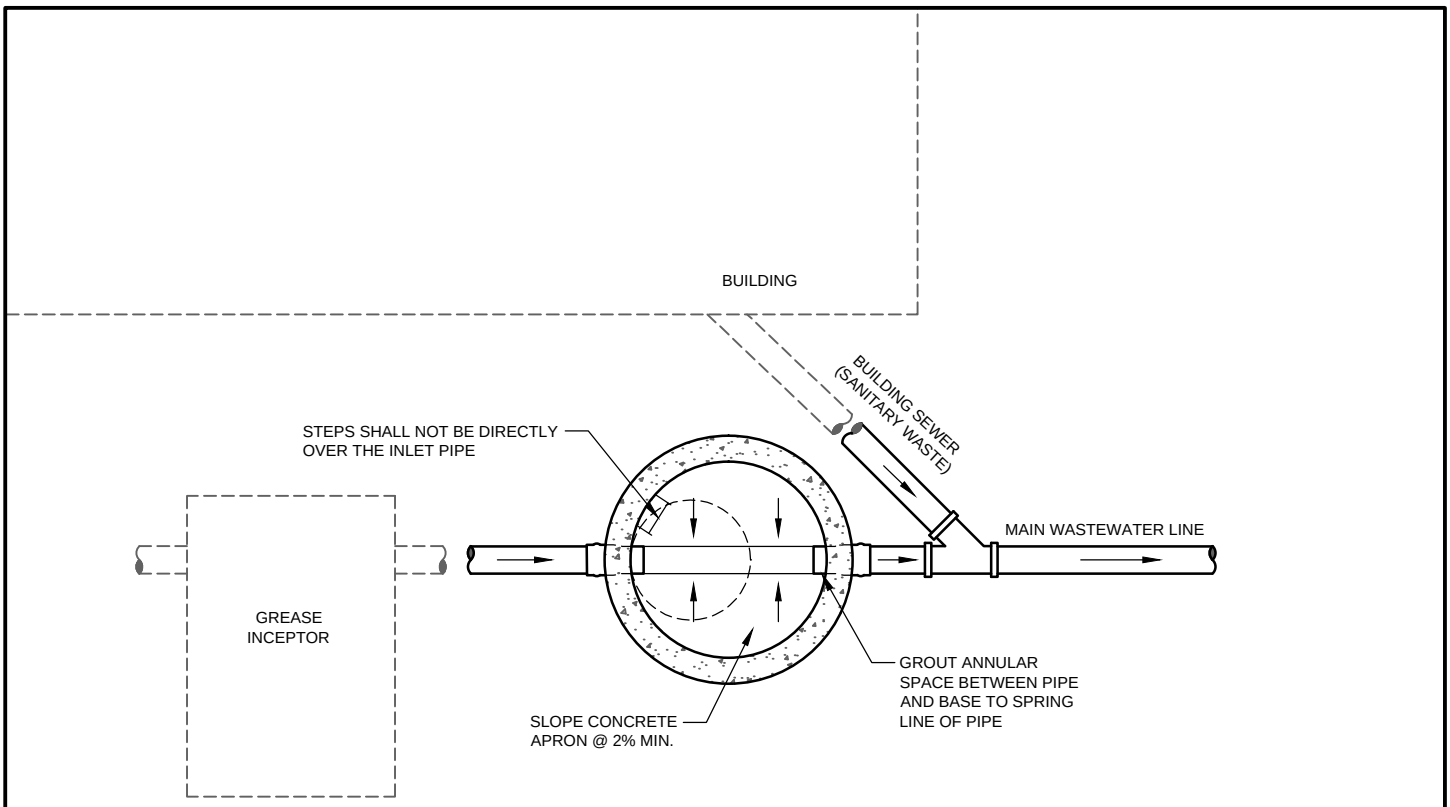

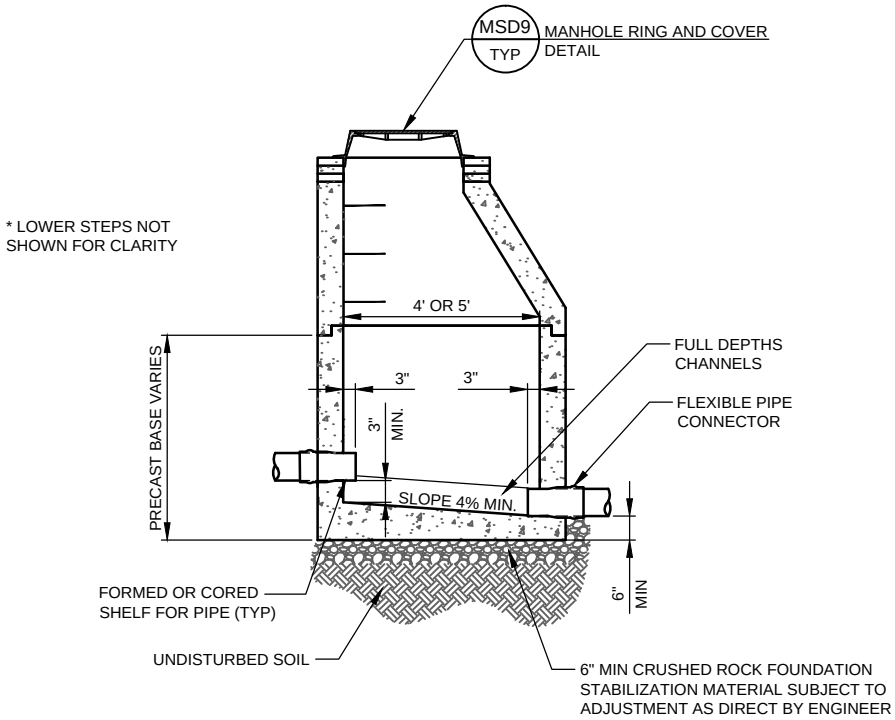

NOTES:

1. BOTTOM OF INLET PIPE INTO MANHOLE MUST BE AT LEAST 3-INCHES ABOVE THE BOTTOM OF THE TROUGH THROUGH THE MANHOLE.
2. WIDTH AND DIAMETER OF TROUGH MUST BE SAME AS DIAMETER OF INLET PIPE.
3. SANITARY WASTE LINE MUST CONNECT AT LEAST TWO FEET DOWNSTREAM OF SAMPLING MANHOLE.
4. MANHOLE OPENING SHALL BE CENTERED OVER INLET PIPE.

MSD14 TYP SAMPLING MANHOLE
N.T.S.

HORROCKS ENGINEERS

DATE: MARCH 2014

2162 West Grove Parkway
Suite 400
Pleasant Grove, UT 84062
(801) 763-5100

MIDWAY SANITATION DISTRICT STANDARD DRAWING

SEWER - 14

H:\Midway S. Dist\District Projects\Construction Specifications\2014\STANDARD DRAWINGS\SEWER 14.dwg - Layout1 - 3/31/2014 10:22am, NATALIER

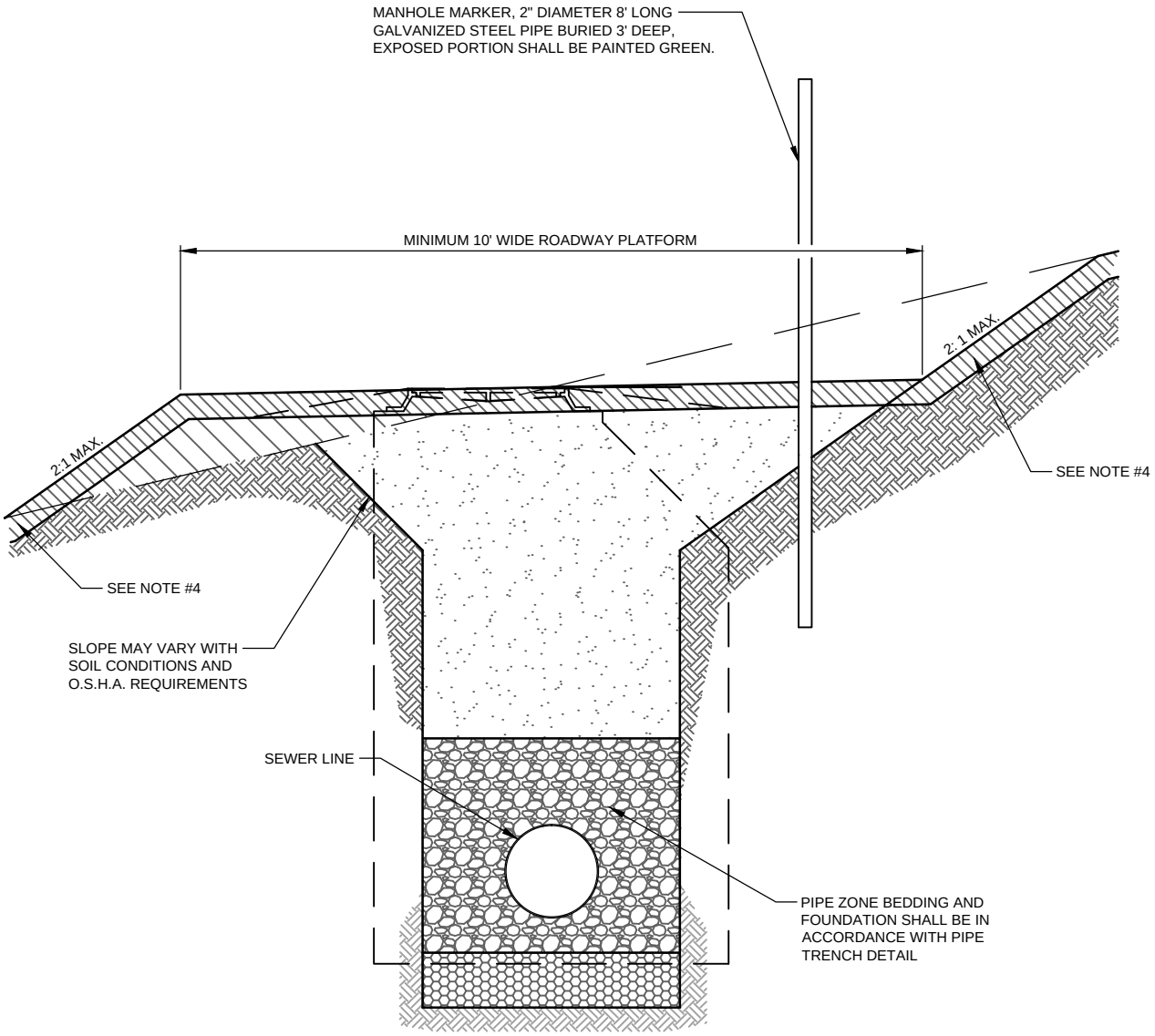

NOTES:

1. BACK FILL MATERIAL ABOVE PIPE ZONE AND FILL AREAS SHALL BE ACCEPTABLE MATERIAL FREE OF HARD CLODS OR FROZEN MATERIAL AND EXCESSIVE AMOUNTS OF LARGE ROCKS. COMPACT TO 95% OF MAXIMUM DRY DENSITY (AASTO-T99). IF EXISTING MATERIAL CANNOT MEET COMPACTION REQUIREMENTS IMPORT MATERIAL WILL BE REQUIRED.
2. A ROADWAY PLATFORM WITH A MINIMUM 10' WIDTH AND MAXIMUM 4% CROSS SLOPE SHALL BE PROVIDED OVER ALL SEWER LINES LOCATED OUTSIDE OF PAVED ROADS AND STREETS.
3. CUT AND FILL SLOPES SHALL BE A MAXIMUM OF 2 HORIZONTAL AND 1 VERTICAL UNLESS APPROVED BY MIDWAY SANITATION DISTRICT.
4. PLACE 4" MINIMUM TOPSOIL ON ALL CUT AND FILL SLOPES AND ROADWAY PLATFORM. COMPACT TO 90% OF MODIFIED PROCTOR DENSITY. PROVIDE EROSION CONTROL AND REVEGETATION.

MSD15 / TYP — OFF-ROAD SEWER LINE TRENCH

N.T.S.

HORROCKS ENGINEERS

DATE: MARCH 2014

2162 West Grove Parkway
Suite 400
Pleasant Grove, UT 84062
(801) 763-5100

MIDWAY SANITATION DISTRICT
STANDARD DRAWING

SEWER - 15

H:\Midway S. Dist\District Projects\Construction Specifications\2014\STANDARD DRAWINGS\SEWER 15.dwg - Layout1 - 3/28/2014 10:44am, NATALIER